NOTES:

1. VIEWS ON THIS SHEET ARE LOOKING AT THE INPUT (FRONT) SIDE OF THE GEARBOX.

IF IN DOUBT ASK

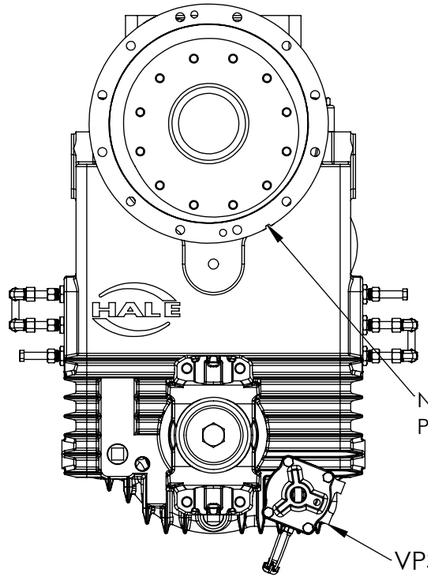

1.60 RATIO

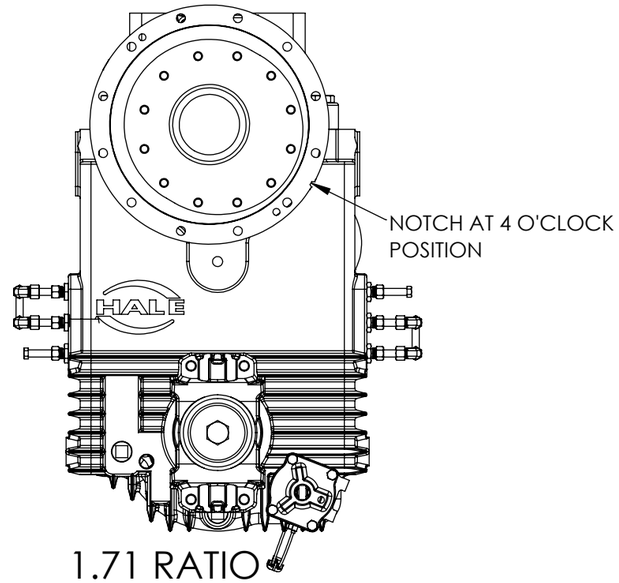

1.71 RATIO

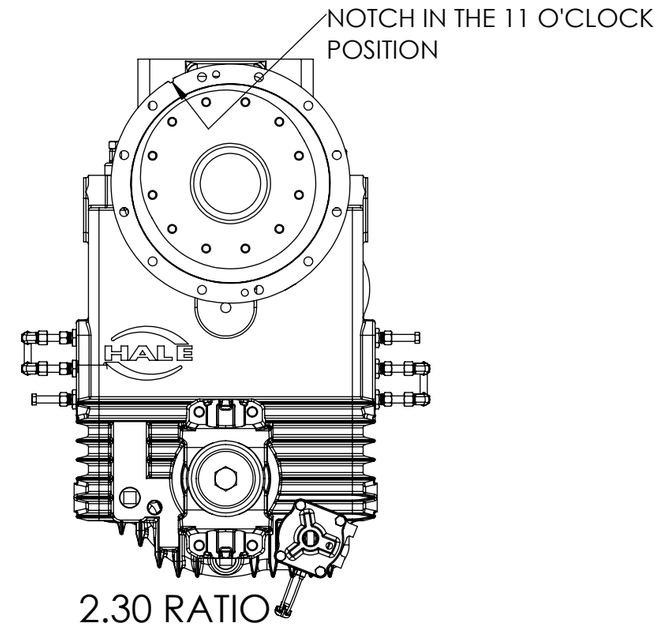

2.30 RATIO

062-0880-50-0 (SHOWN) AND 062-0860-00-0

062-0880-12-0 (SHOWN) AND 062-0850-00-0

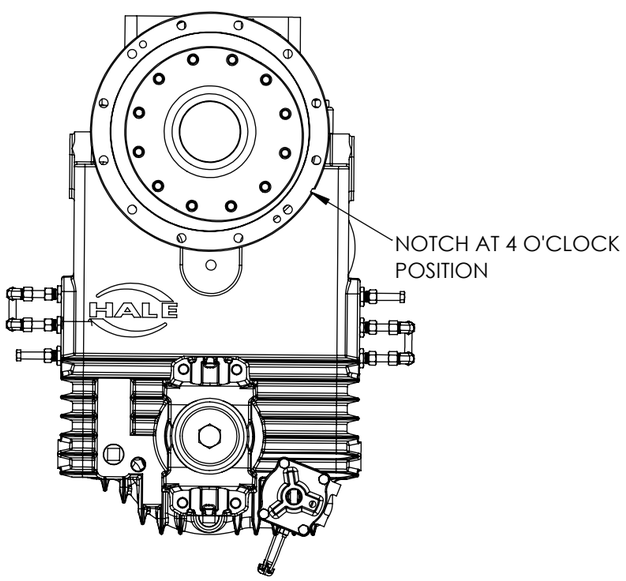

1.89 RATIO

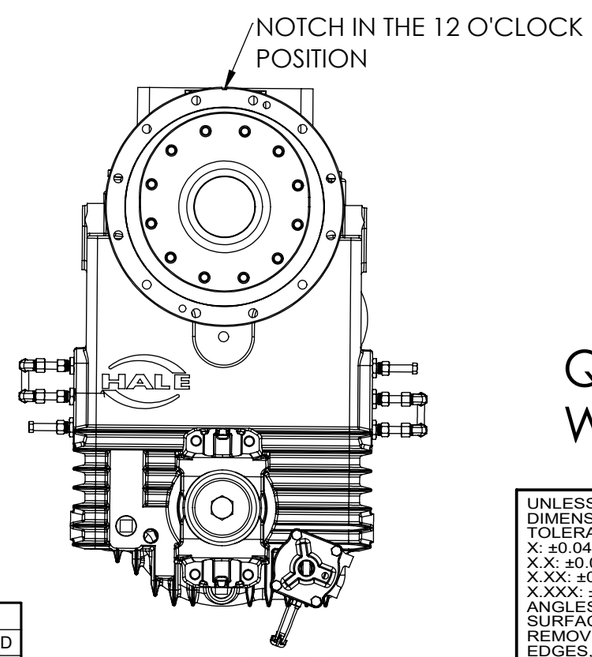

2.04 RATIO

QMAX, QTWO, QMID, 8FKF SERIES PUMPS WITH 'LK' OR 'XK' GEARBOX

REVISIONS

ECN	REV.	ZONE	CHANGED FROM	BY	DATE	APVD
4991	B	-	REDRAWN IN SOLIDWORKS, VIEWS CLARIFIED	MAS	11/21/19	TAM
5102	C		REMOVED 2.5 RATIO OPTION	DMB	06APR2020	JS2

UNLESS OTHERWISE SPECIFIED
DIMENSIONS ARE IN INCHES
TOLERANCE FOR INCH DIMENSIONS:
X: ±0.04
X.X: ±0.02
X.XX: ±0.01
X.XXX: ±0.005
ANGLES: ±1°
SURFACE TEXTURE IN µm Ra
REMOVE ALL BURRS AND SHARP EDGES, 0.01MAX

COPYRIGHT ©
NOT TO BE REPRODUCED OR USED TO MAKE OTHER DRAWINGS OR MACHINERY

FSG OF IDEX CORPORATION

MATERIAL

MADE FROM

FINISH

PROJECT

HALE GODIVA Class1

TITLE

K-SERIES GEARBOX OFFSETS

DRAWN	MD	SIZE B	DRAWING NUMBER PL1157
APPROVED	PRW	SCALE 1:12	REV C
DATE	11/22/2019		SHEET 1 OF 2

IF IN DOUBT ASK

PROJECTION:

NOTES:
1. VIEWS ON THIS SHEET ARE LOOKING AT THE OUTPUT (REAR) SIDE OF THE GEARBOX

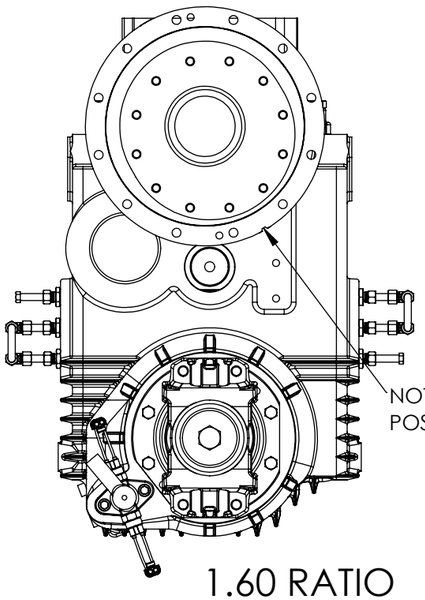

1.60 RATIO

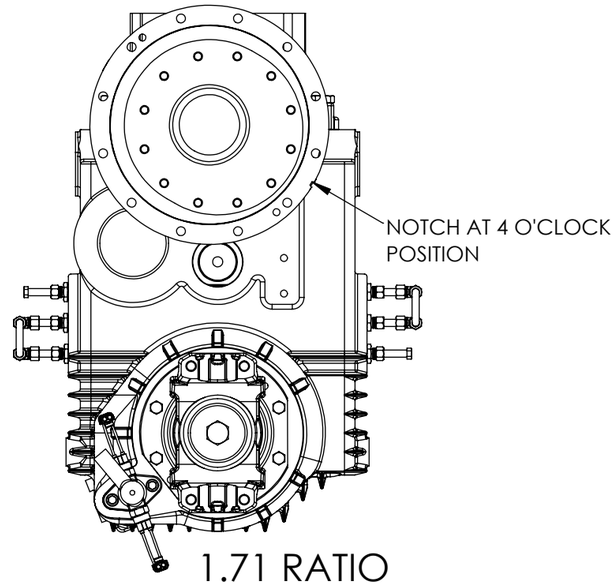

1.71 RATIO

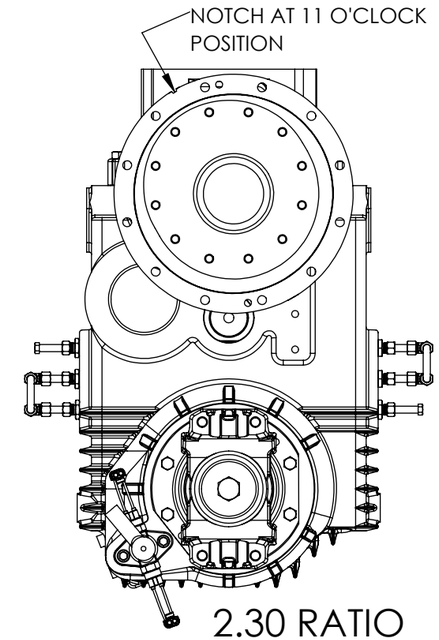

2.30 RATIO

062-0880-50-0 (SHOWN) AND 062-0860-00-0

062-0880-12-0 (SHOWN) AND 062-0850-00-0

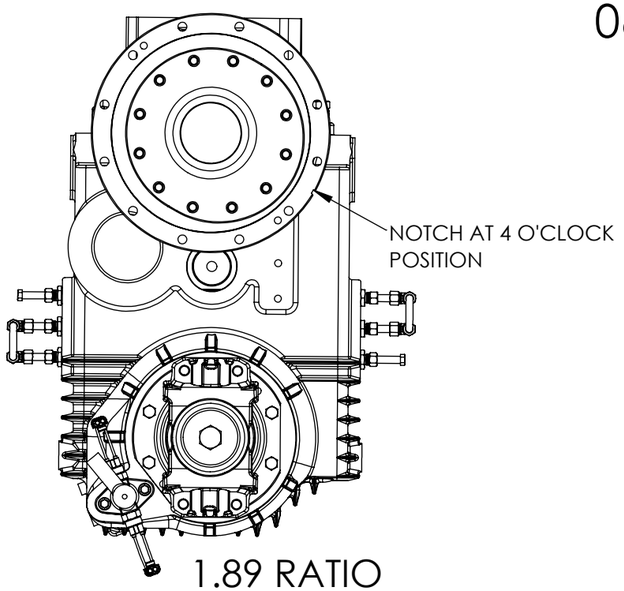

1.89 RATIO

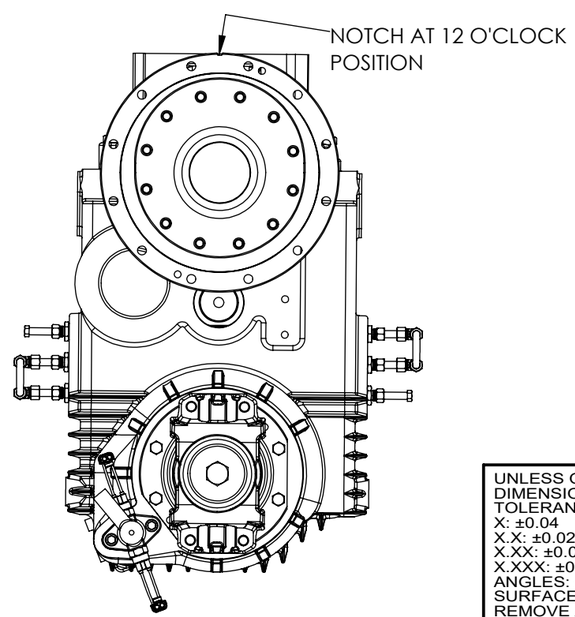

2.04 RATIO

8FKR SERIES PUMPS AND QMAX, QTWO, QMID FRONT DRIVE PUMPS WITH 'LK' OR 'XK' GEARBOX

REVISIONS

ECN	REV.	ZONE	CHANGED FROM	BY	DATE	APVD
-	-	See Sheet1	See Sheet1	-	-	-

UNLESS OTHERWISE SPECIFIED
DIMENSIONS ARE IN INCHES
TOLERANCE FOR INCH DIMENSIONS:
X: ±0.04
X.X: ±0.02
X.XX: ±0.01
X.XXX: ±0.005
ANGLES: ±0.25°
SURFACE TEXTURE IN µm Ra
REMOVE ALL BURRS AND SHARP EDGES, 0.01MAX

COPYRIGHT ©
NOT TO BE REPRODUCED OR USED TO MAKE OTHER DRAWINGS OR MACHINERY

FSG OF IDEX CORPORATION

MATERIAL

MADE FROM

FINISH

PROJECT

HALE GODIVA Class1

TITLE

K-SERIES GEARBOX OFFSETS

DRAWN

APPROVED

DATE 11/22/2019

SIZE B

SCALE 1:12

DRAWING NUMBER PL1157

REV C

SHEET 2 OF 2