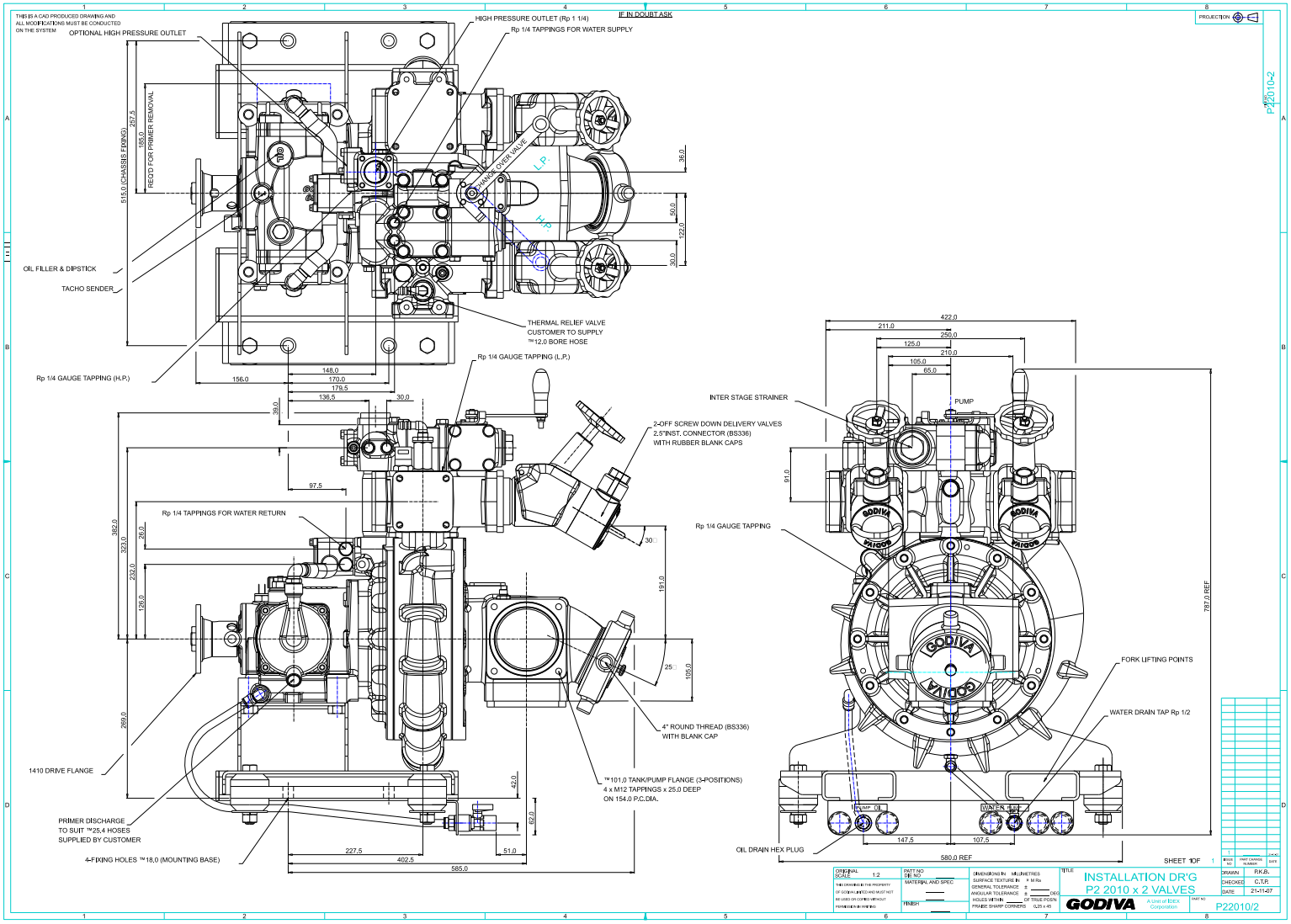
THIS IS A CAD PRODUCED DRAWING AND ALL MODIFICATIONS MUST BE CONDUCTED ON THE SYSTEM
IF IN DOUBT ASK
PROJECTION
OPTIONAL HIGH PRESSURE OUTLET
HIGH PRESSURE OUTLET (Rp 1 1/4)
Rp 1/4 TAPPINGS FOR WATER SUPPLY
515.0 (CHASSIS FIXING)
257.5
185.0
REQ'D FOR PRIMER REMOVAL
CHANGE OVER VALVE
L.P.
H.P.
36.0
50.0
122.0
30.0
OIL FILLER & DIPSTICK
TACHO SENDER
THERMAL RELIEF VALVE
CUSTOMER TO SUPPLY
™12.0 BORE HOSE
Rp 1/4 GAUGE TAPPING (H.P.)
156.0
148.0
170.0
179.5
136.5
30.0
Rp 1/4 GAUGE TAPPING (L.P.)
39.0
97.5
2-OFF SCREW DOWN DELIVERY VALVES
2.5"INST. CONNECTOR (BS336)
WITH RUBBER BLANK CAPS
Rp 1/4 TAPPINGS FOR WATER RETURN
382.0
323.0
26.0
232.0
126.0
30
191.0
25
105.0
269.0
4" ROUND THREAD (BS336)
WITH BLANK CAP
1410 DRIVE FLANGE
™101.0 TANK/PUMP FLANGE (3-POSITIONS)
4 x M12 TAPPINGS x 25.0 DEEP
ON 154.0 P.C.DIA.
42.0
62.0
PRIMER DISCHARGE
TO SUIT ™25.4 HOSES
SUPPLIED BY CUSTOMER
4-FIXING HOLES ™18.0 (MOUNTING BASE)
227.5
402.5
51.0
585.0
422.0
211.0
250.0
125.0
210.0
105.0
65.0
INTER STAGE STRAINER
PUMP
91.0
Rp 1/4 GAUGE TAPPING
787.0 REF
FORK LIFTING POINTS
WATER DRAIN TAP Rp 1/2
PUMP OIL
WATER
147.5
107.5
OIL DRAIN HEX PLUG
580.0 REF
SHEET 1OF 1
ORIGINAL SCALE 1:2
PATT NO DIE NO
MATERIAL AND SPEC
FINISH
DIMENSIONS IN MILLIMETRES
SURFACE TEXTURE IN ± M Ra
GENERAL TOLERANCE ±
ANGULAR TOLERANCE ± DEG
HOLES WITHIN OF TRUE POS'N
PRAISE SHARP CORNERS 0.25 x 45
TITLE
INSTALLATION DR'G
P2 2010 x 2 VALVES
GODIVA
A Unit of IDEX Corporation
PART NO
P22010/2
DRAWN P.K.B.
CHECKED C.T.P.
DATE 21-11-07
P22010-2