WELDON
Technologies, Inc.
Weldon Technologies, Inc.
3656 Paragon Drive, Columbus, OH 43228
Tel: (614)529-7230 Fax: (614)527-3547

INSTALLATION SHEET

7418-0185-00

185 WATT, 8 OUTLET STROBE POWER SUPPLY

***IMPORTANT!** This product is **NOT** waterproof. It must be mounted to a metal surface in a clean dry area.*

TECHNICAL SPECIFICATIONS

INPUT VOLTAGE ..... **10 to 16 Vdc**
INPUT CURRENT ..... 18A at 12.8V
INPUT POWER ..... 230 Watts
OUTPUT POWER ..... 185 Watts
FLASH RATES
Double Flash: ..... 170 flashes per minute.
Quad Flash: ..... 140 flashes per minute.
Quintuple Flash: ..... 140 flashes per minute.
Mega Flash: ..... 140 flashes per minute.

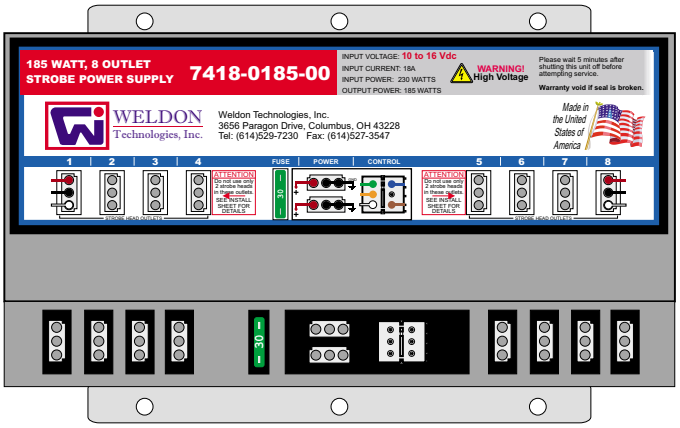

CONNECTOR DIAGRAMS

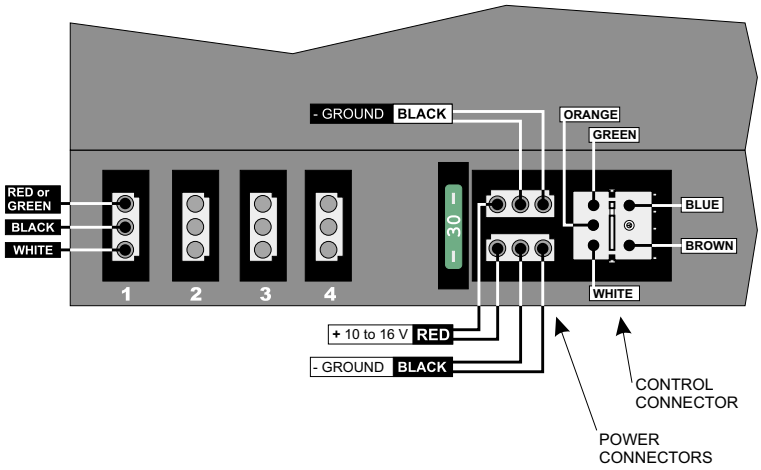

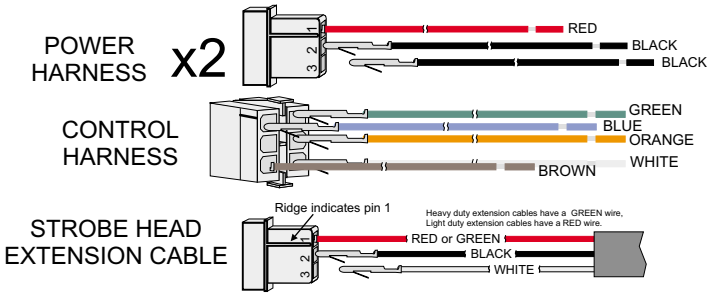

INSTALLING THE 7418-0185-00

1. **Mounting Considerations**
   Mount the power supply in a clean, dry location. **It is highly recommended that the unit be mounted to a flat metal surface to aid in heat dissipation**. Use the power supply as a template to mark the hole locations. The mounting holes will accept up to a 1/4" bolt. *Note: The power supply baseplate must be connected to chassis ground (GND) to reduce radio interference.*

2. **Strobe Head installation**
   Plug 8 strobe heads into desired outlets.

ATTENTION: Connecting only **4** heads to this power supply is not recommended. 185 Watts divided by 4 strobe heads = 46.25 Watts per head! Use strobe heads rated for 30 Watts or higher. (Do not use 20W heads)

3. **Electrical Hookup**
   If you have purchased a pre wired switch harness, follow the included instructions. If you are wiring the system yourself follow the instructions below and the diagrams on the next page.

POWER WIRING:
• Connect the RED wires to battery positive (+) or a fuse panel circuit rated for at least 25 AMPS.
• Connect all four of the BLACK wires directly to vehicle chassis GND.
Note: Use the correct size wire for power connections.
The length of the wires determines the size needed.
1 to 10 ft. use 16AWG wire.
10 to 20 ft. use 14AWG wire.
20 to 35 ft. use 12AWG wire.
35 to 50 ft. use 10AWG wire.
The use of at least 14AWG wire is highly recommended.

CONTROL WIRING
• GREEN, and BLUE wires activate strobe head outlets. Each wire controls 4 outlets.
• WHITE, ORANGE, and BROWN wires select the flash pattern. See the *Flash Pattern Table* on the next page for a complete list of functions.
Control wires are 'selected' by connecting to +12V. When all control wires are unconnected, or 'SHUTDOWN' pattern is selected the power supply is set to a low current *Standby Mode*. Input current is typically less than 25ma (.025A).

*Note: GREEN, BLUE, WHITE, ORANGE and BROWN are all **Low Current** circuits and can be wired with a minimum of 22AWG wire.*

SELECTING OUTLETS/FLASH PATTERNS

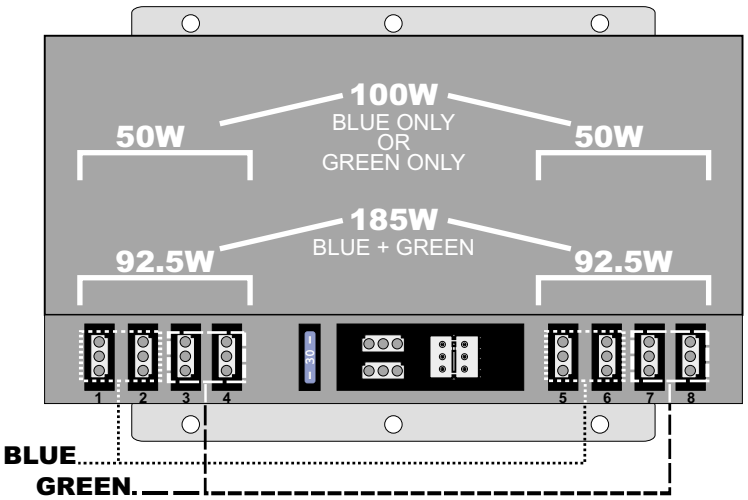

Activating Strobe Head Outlets:

The BLUE and GREEN wires activate outlets.
Output power is automatically reduced when only 4 strobe heads are activated. This protects the strobe heads.
Connecting the wire(s) to +12V activates the outlets.

BLUE wire: Activates Outlets 1, 2, 5 and 6
Output power 100W. Each head = 25W.

GREEN wire: Activates Outlets 3, 4, 7 and 8
Output power 100W. Each head = 25W.

BLUE + GREEN wires: Activates ALL outlets.
Output power 185W. Each head = 23W.

WARNING: This is a High Output Power Supply

This power supply is designed to have 8 strobe heads connected. Connecting only 4 strobe heads and activating all outlets (BLUE+GREEN) may overheat the strobe heads.

Do not:
Connect strobe heads to outlets 1,2,7,8 and activate ALL HEADS. (BLUE+GREEN connected to +12V).

Do not:
Connect strobe heads to outlets 3,4,5,6 and activate ALL HEADS. (BLUE+GREEN connected to +12V).

These configurations may result in damage to the strobe heads.

Connecting 4 strobe heads to this power supply is only possible if they are plugged into outlets 1,2,3,4 or 5,6,7,8. In this case, the 4 heads will receive only 92.5W which equals 23W per head.

Selecting a flash pattern: In the table below, find the desired flash pattern. Connect the wires marked ***POWER*** to +12v or the 'load' side of the ON/OFF switch. Remove the remaining wires, or connect them to **-** Ground.

Flash Pattern Table

#	BROWN	WHITE	ORANGE	FLASH PATTERN
1				SHUTDOWN
2			POWER	Quad Flash
3		POWER		Mega Flash
4		POWER	POWER	Double Flash
5	POWER			Mega Flash 1-4, Quad Flash 5-8
6	POWER		POWER	Double Flash 1-4, Mega Flash 5-8
7	POWER	POWER		Quintuple Flash 1-4, Mega Flash 5-8
8	POWER	POWER	POWER	Quad Flash 1-4, Double Flash 5-8

WIRING/CONNECTION DIAGRAMS

DIAGRAM (1): ON/OFF Switch, Fixed flash pattern. Choose flash pattern from table.

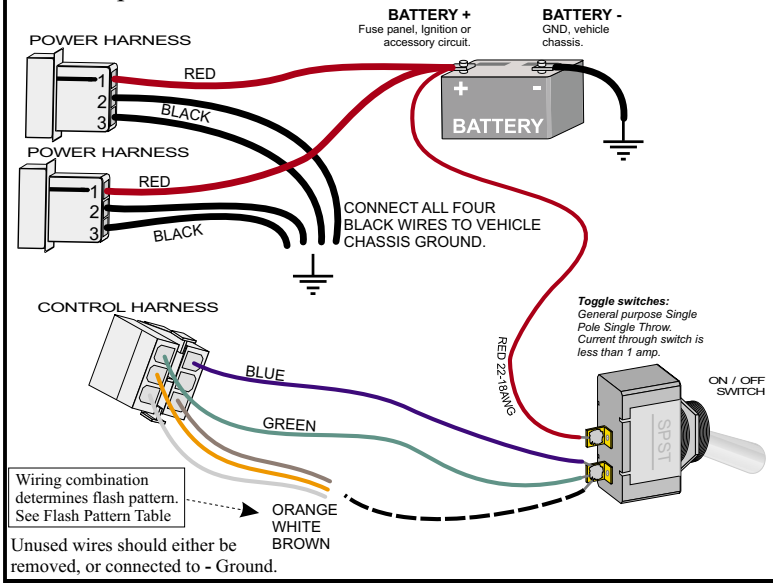

WIRING/CONNECTION DIAGRAMS

DIAGRAM (2): Selective switching of Strobe Heads using toggle switches. Fixed flash pattern. Choose flash pattern from table.

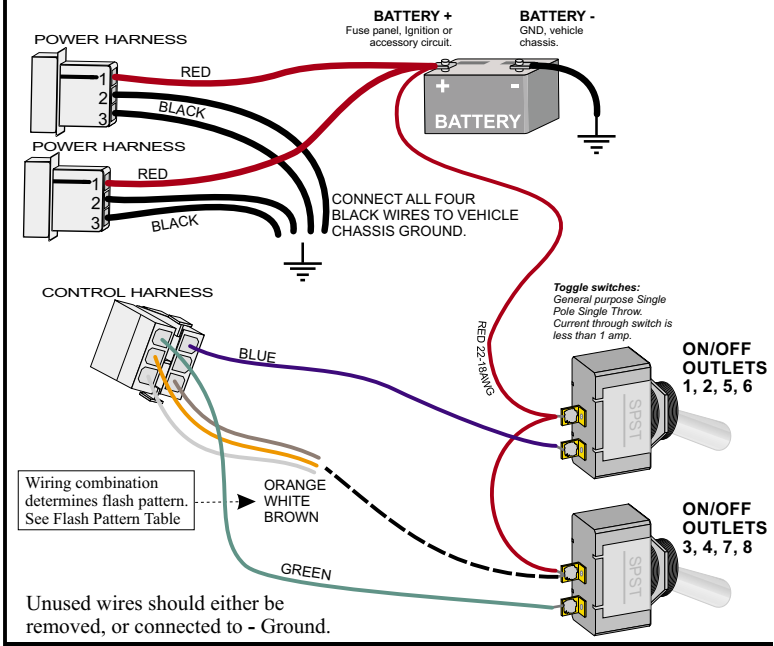

TROUBLESHOOTING

Blown Fuse: The 7418-0185-00 will blow a fuse if the input voltage is reversed. If this happens, first locate the wiring fault, then replace the fuse with one of the same rating.

Erratic behavior (and/or) shutdown: The 7418-0185-00 will shut down if there is a short circuit condition on any one of the strobe heads. If the electrical conductors connecting the power supply to the strobe heads are exposed to water a short circuit will result. The first sign is intermittent operation, followed by complete shutdown of the strobe system. To find the short circuit, unplug all strobe head cables from the 7418-0185-00. Test **one** cable/head at a time until the problem is found.