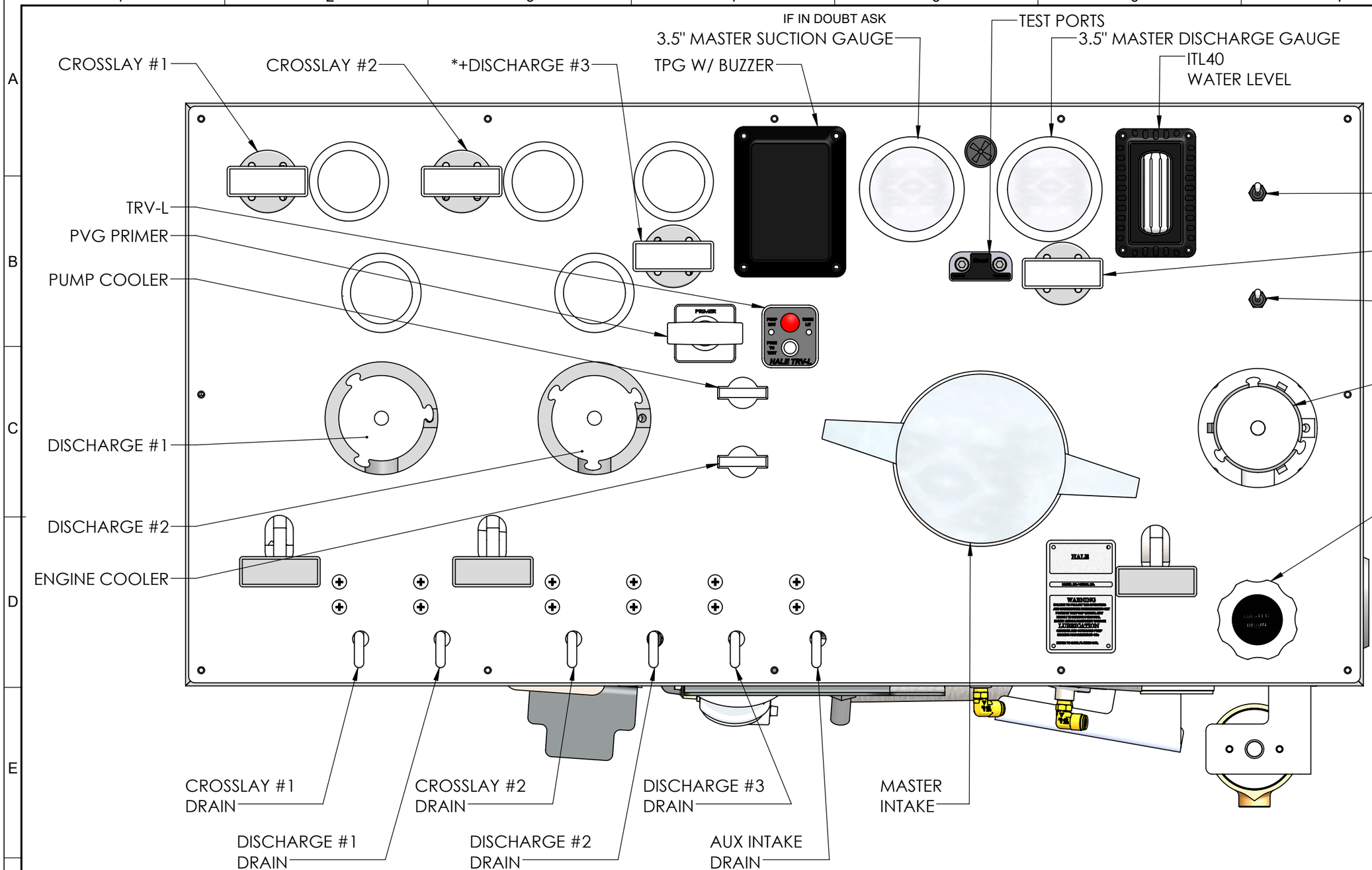

FRONT VIEW

PROJECTION:

COMPLIANCE NOTE:
15 CFR 758.6 These items are controlled by the U.S. Government and authorized for export only to the country of ultimate destination for use by the ultimate consignee or end-user(s) herein identified. They may not be resold, transferred, or otherwise disposed of, to any other country or to any person other than the authorized ultimate consignee or end-user(s), either in their original form or after being incorporated into other items, without first obtaining approval from the U.S. government or as otherwise authorized by U.S. law and regulations the term "authorized" includes exports, reexports and transfers (in-country) designated under No License Required (NLR). These drawings are trademarked and copy written intellectual property of IDEX and it subsidiaries. and may not be reproduced or replicated without the express written permission of IDEX corp.

*OPTIONAL
+INCLUDED ON SK750 SELECT

VALVE	SIZE
DISCHARGE #1	2.5"
DISCHARGE #2	2.5"
*+DISCHARGE #3	2.5"
CROSSLAYS	2.0"
*HOSE REEL	1.5"
TANK FILL	2.0"
TANK-TO-PUMP	3.0"
AUX INTAKE	2.5"
MASTER INTAKE	5.0"

UNLESS OTHERWISE SPECIFIED
DIMENSIONS ARE IN INCHES
TOLERANCE FOR INCH DIMENSIONS:
X: ±0.04
X.X: ±0.02
X.XX: ±0.01
X.XXX: ±0.005
ANGLES: ±1°
SURFACE TEXTURE IN µm Ra
REMOVE ALL BURRS AND SHARP EDGES, 0.01MAX

COPYRIGHT ©
NOT TO BE REPRODUCED OR USED TO MAKE OTHER DRAWINGS OR MACHINERY

FSG OF IDEX CORPORATION

MATERIAL
MADE FROM
FINISH
PROJECT

HALE GODIVA Class1

TITLE
SIDE KICK SELECT

DRAWN	KTN	SIZE B	DRAWING NUMBER FSG-PL-01478
APPROVED	NG	SCALE 1:4	REV A
DATE	20SEP2019		SHEET 1 OF 2

REVISIONS

ECN	REV.	ZONE	CHANGED FROM	BY	DATE	APVD
	A		ORIGINAL RELEASE	KTN	20SEP2019	NG

IF IN DOUBT ASK

PROJECTION:

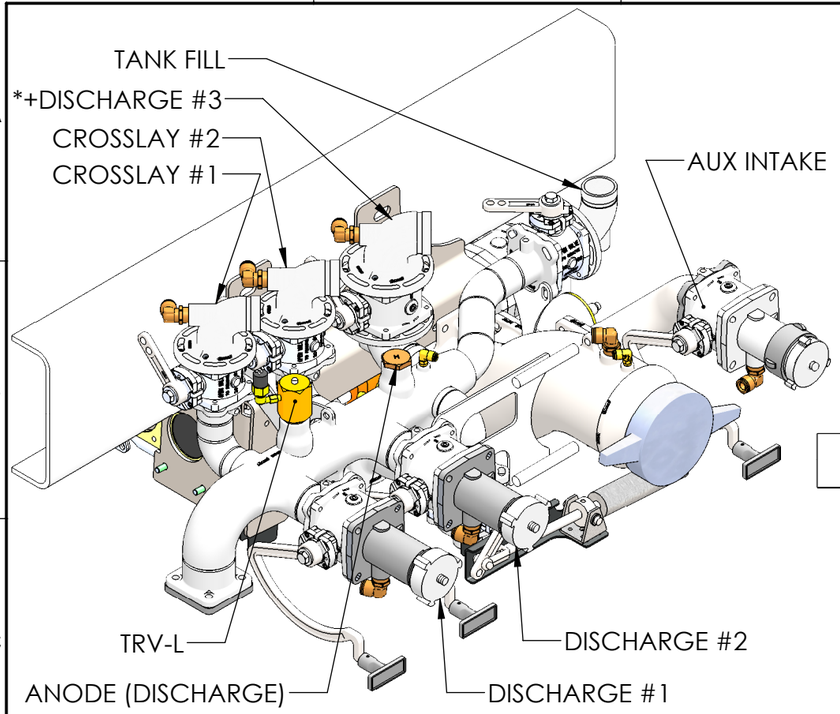

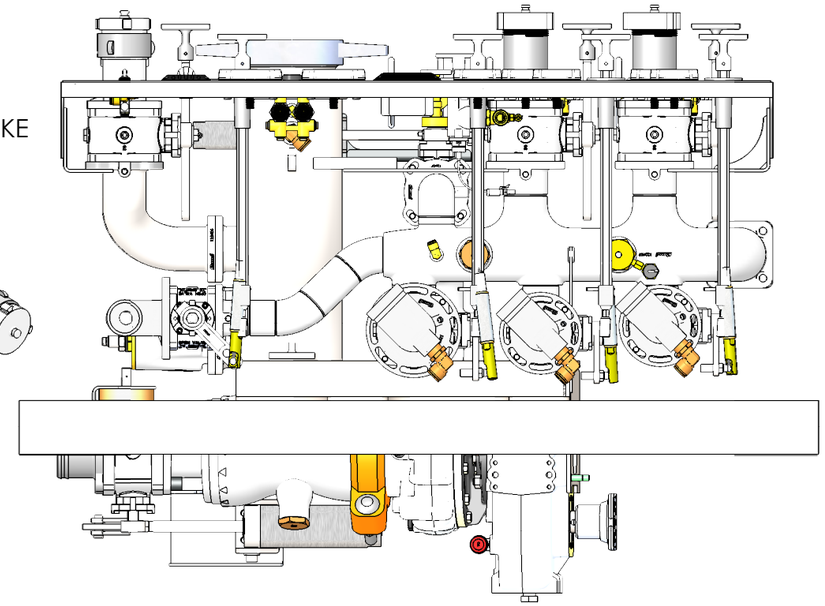

TOP VIEW

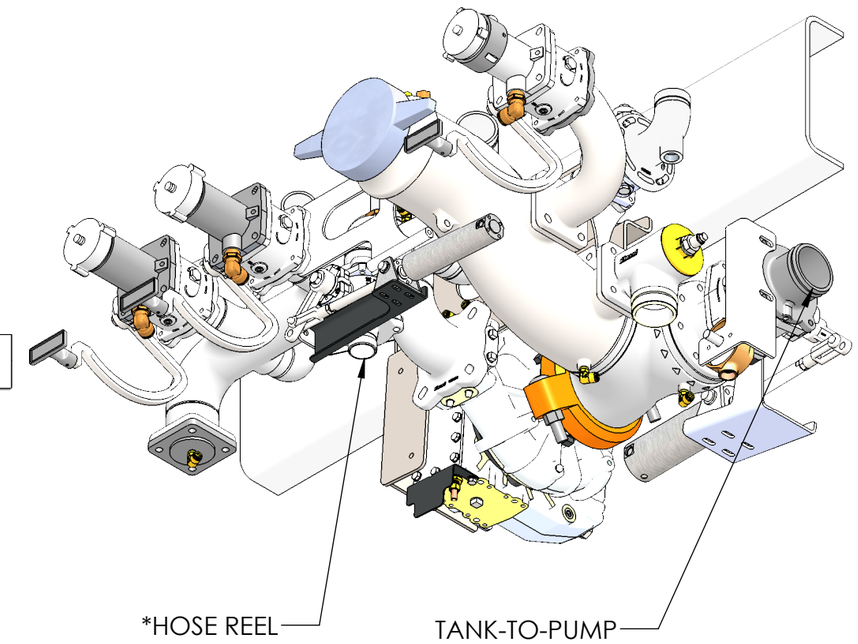

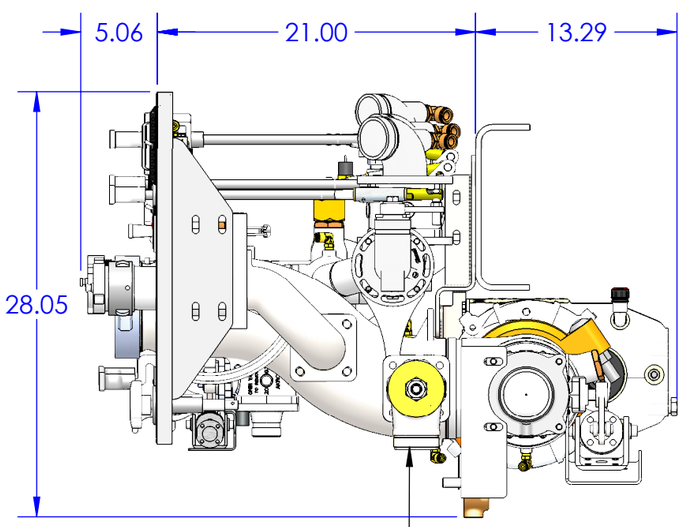

LH VIEW

INTAKE RELIEF VALVE

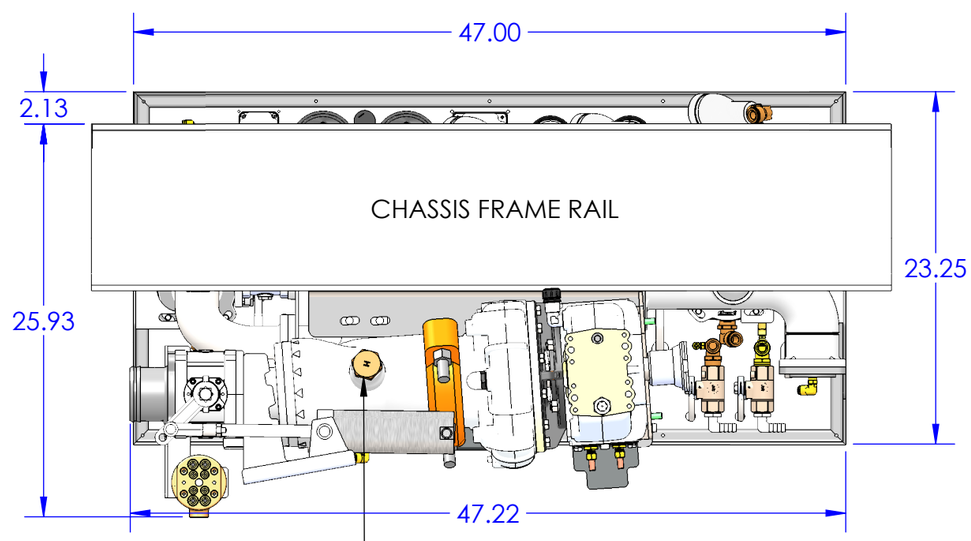

REAR VIEW

ANODE (SUCTION)

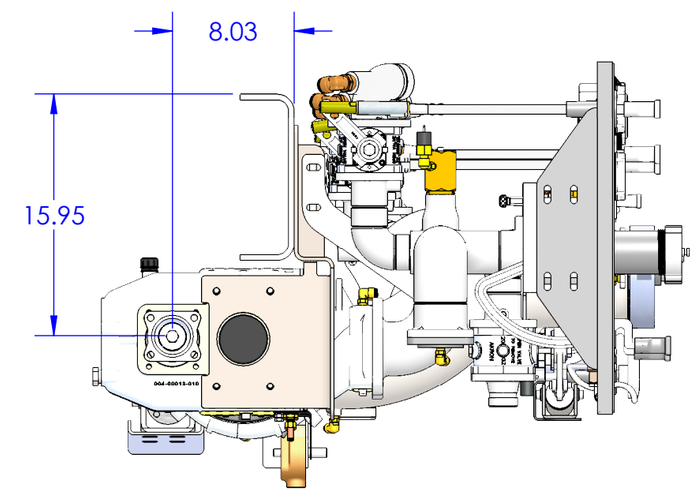

RH VIEW

REVISIONS						
ECN	REV.	ZONE	CHANGED FROM	BY	DATE	APVD
-	-	See Sheet1	See Sheet1	-	-	-

UNLESS OTHERWISE SPECIFIED
DIMENSIONS ARE IN INCHES
TOLERANCE FOR INCH DIMENSIONS:
X: ±0.04
X.X: ±0.02
X.XX: ±0.01
X.XXX: ±0.005
ANGLES: ±0.25°
SURFACE TEXTURE IN µm Ra
REMOVE ALL BURRS AND SHARP EDGES, 0.01MAX

COPYRIGHT ©
NOT TO BE REPRODUCED OR USED TO MAKE OTHER DRAWINGS OR MACHINERY

FSG OF IDEX CORPORATION

MATERIAL

MADE FROM

FINISH

PROJECT

HALE GODIVA Class1

TITLE

SIDE KICK SELECT

DRAWN	KTN	SIZE	DRAWING NUMBER	REV
APPROVED	NG	B	FSG-PL-01478	A
DATE	20SEP2019	SCALE 1:10		SHEET 2 OF 2