UV SmartCAFS

Installation and Operation Manual

HALE PRODUCTS, INC.
A Unit of IDEX Corporation
607 NW 27th Ave
Ocala, FL 34475
United States

800-533-3569

800-520-3473

www.haleproducts.com
Halecustomerservice@idexcorp.com

FSG-MNL-00157
REV A, December 2015

REVISION RECORD

REV	Date	BY	Page	Description
A	28DEC2015	JDF	All	New Issue
B	24JAN2017	JJS	Drawings	Revised Drawing Update

©HALE PRODUCTS, INC. Our policy is one of continuous development. We therefore reserve the right to amend specifications without notice or obligation.

T.O.C.

Table of Contents

REVISION RECORD **2**

T.O.C. **3**

INTRODUCTION **7**

ENVIRONMENTAL PROTECTION **7**

SAFETY - RELEVANT DATA **8**

MAINTENANCE 8
TRAINING 8
NOISE 9
GAUGES 9
CLUTCH ENGAGEMENT 9

GENERAL DATA **10**

COMPRESSOR 10
PUMP 10
COOLING SYSTEM 10
FOAM PROPORTIONING SYSTEM 3.3 - CLASS A AND B FOAM COMPATIBLE 10
FOAM PROPORTIONING SYSTEM 5.0 - CLASS A AND B FOAM COMPATIBLE 10
FOAM PROPORTIONING SYSTEM 6.5 - CLASS A AND B FOAM COMPATIBLE 10

LUBRICANTS **11**

COMPRESSOR SYSTEM 11
PUMP GEARBOX 11
CLUTCH HOUSING 11

MAXIMUM INPUT RPM **11**

MODEL IDENTIFICATION SYSTEM **12**

RECOMMENDED FOAM AGENTS **13**

MAJOR COMPONENTS AND CONTROLS **14**

GENERAL ARRANGEMENT 14
SMARTCAFS MIXING MANIFOLD 15
(A) VOLUTE STYLE PUMP 15
(B) HIGH PRESSURE 16
(C) STANDARD PRESSURE 16
FOAM UNIT 3.3, 5.0, 6.5 FOAM PUMP COMPONENT GROUP 17
CONTROL PANEL - SMARTCAFS 18
COMPONENT PANEL CUT-OUT DIMENSIONS 18

SYSTEM OVERVIEW **19**

SAFETY INTERLOCKS ARE PROVIDED TO ENSURE THAT: 19
COMPRESSOR 19
OIL COOLER 19
SEPARATOR TANK 19
MANIFOLD 20
FOAM UNIT - FOAM PROPORTIONING SYSTEM 20
FOAM UNIT 3.3, 5.0, 6.5 SYSTEM – REMOTE MOUNTED 21

©HALE PRODUCTS, INC. Our policy is one of continuous development. We therefore reserve the right to amend specifications without notice or obligation.

FOAM UNIT DIMENSIONS 22

INSTALLATION AND INITIAL SET-UP 23

LIFTING POINTS 23
STRAP LIFT POINTS 23

DRIVE LINE 24

PUMP CLEARANCE 26
PANEL STRAINER 27
COMPRESSOR CONNECTIONS 28
COMPRESSOR OIL SERVICE ACCESS 29
FLUID DRAIN POINTS 30
WATER DRAIN – VOLUTE STYLE 31
WATER DRAIN – Q-SERIES 32

SYSTEM OIL FILL 33

OIL FILLING POINTS 33
ADDING OIL 33
GEARBOX 33
GEARBOX OIL FILLING AND CHECKING. 33
OIL SEPARATOR TANK 34
SEPARATOR TANK FOR COMPRESSOR OIL 35
HOT-SHIFT CLUTCH HOUSING 36
CLUTCH FLUID FILLING & CHECKING 36

SCHEMATICS 37

PLUMBING CONNECTIONS – DSD 37
PLUMBING CONNECTIONS – Q-SERIES 39
SMARTCAFS200 INTERCONNECTION DIAGRAM – DSD 41
SMARTCAFS200 INTERCONNECTION DIAGRAM – Q-SERIES 42

FOAM TANK LOW LEVEL SENSOR 43

ADDITIONAL INSTALLATION POINTS 43

FOAM TANK TO FOAM PUMP 43

VEHICLE DESIGN CONSIDERATIONS 44

COMMISSIONING / START-UP PROCEDURE 45

OPTIONAL TANK SELECTION FOR FOAM UNIT 3.3/5.0/6.5 46

GENERAL OPERATION 47

PRESET SCREEN (START SCREEN) 47
(A) PRESET BUTTONS 47
(B) WATER FLOW DISPLAY 47
(C) HOME BUTTON 48
(D) MENU BUTTON 48
OPERATING SCREEN 48
(E) WATER FLOW DISPLAY 48
(F) FOAM FLOW CAPACITY 48
(G) FOAM PERCENTAGE INDICATOR 48
(H) FOAM POWER BUTTON 49
(I) FOAM INCREASE AND DECREASE BUTTONS 49
(J) AIR/WATER PRESSURE DUPLEX GAUGE 49
(K) HOME BUTTON 49
(L) CURRENT PRESET 49
(M) AIR DISPLAY 49

©HALE PRODUCTS, INC. Our policy is one of continuous development. We therefore reserve the right to amend specifications without notice or obligation.

(N) CAFS AIR/WATER FLOW RATIO 49
(O) CAFS ARC VALVE POSITION 50
(P) CAFS POWER BUTTON 50
(Q) CAFS WET AND DRY BUTTONS 50
(R) TANK-TO-PUMP VALVE BUTTON 50
(S) AUTO-FILL MANUAL BUTTON 50
(T) AUTO-FILL ON/OFF BUTTON 50
(U) MENU BUTTON 51
(V) ADDITIONAL INFORMATION DISPLAY 51

FOAM/CAFS OPERATION 52

ENGAGE THE PUMP 52
START FOAM/CAFS OPERATION BY SELECTING A PRESET (OR MANUAL) 52
INCREASE ENGINE SPEED FOR DESIRED WATER PRESSURE 53
SELECTING A NEW PRESET 53
MODIFY THE CURRENT OPERATING PARAMETERS 53
DISENGAGING THE COMPRESSOR CLUTCH 54
OVERHEAT SHUT DOWN 55
FLUSHING 55

WATER AUTO-FILL OPERATION 56

START/STOP AUTO-FILL 56
MANUALLY OPEN THE AUTO-FILL VALVE 56
SETTING THE DESIRED TANK LEVEL FOR AUTO-FILL 56

MENUS 57

SYSTEM MENU 57
SETTING THE SYSTEM TIME 57
USER MENU 58
(W) UP/DOWN ARROW BUTTONS 58
(X) "+" AND "-" BUTTONS 59
(Y) EXIT BUTTON 59
(Z) SAVE BUTTON 59
OEM MENU 59
(AA) UP/DOWN ARROW BUTTONS 60
(BB) "+" AND "-" BUTTONS 60
(CC) EXIT BUTTON 60
(DD) SAVE BUTTON 60

CALIBRATIONS 61

WATER FLOW CALIBRATION (STANDARD) 61
WATER FLOW CALIBRATION (DIRECT) 64
FOAM FLOW CALIBRATION 64

CONFIGURATION 67

PRESET CONFIGURATION (STANDARD) 67
PRESET CONFIGURATION (LIVE) 68

ON-SCREEN WARNINGS AND INFORMATION 69

MAINTENANCE MINDER 70

ROUTINE MAINTENANCE 72

AIR COMPRESSOR MOISTURE DRAIN 73
OIL AND OIL FILTER 74
COOLING WATER STRAINER 75
AIR CLEANER ELEMENT 75

©HALE PRODUCTS, INC. Our policy is one of continuous development. We therefore reserve the right to amend specifications without notice or obligation.

COMPRESSOR BELT MAINTENANCE 76

REMOVE BELT GUARD 76
CHECKING BELT TENSION 77
ADJUSTING BELT TENSION 78

HOT SHIFT CLUTCH MAINTENANCE 79

CHANGING CLUTCH OIL 79

MAINTENANCE SCHEDULE FOR SMARTCAFS 80

MAINTENANCE OPERATIONS PUMP – SMARTCAFS 81

CAFS MIXING MANIFOLD – GREASING BALL VALVE 81
LUBRICANTS: 81
VACUUM TEST PUMP MANIFOLD 82
PRESSURE TEST – PERFORMED WITHOUT PUMP RUNNING 82
CAFS - SETTING THE AIR BALANCE CONTROL VALVES 83
1. SYMPTOMS OF IMPROPER ADJUSTMENT 83
2. FUNCTIONALLY TEST SMART CAFS AIR PRESSURE /WATER PRESSURE & ADJUST MATCH 83
CAFS – HOT SHIFT CLUTCH ENGAGEMENT 85
1. THE HOT SHIFT CLUTCH IS ENGAGED WHEN THE CAFS SWITCH IS ACTIVATED. 85
3. SETTING THE HOT SHIFT CLUTCH ENGAGEMENT: 85

RECOMMENDED SPARES KIT FOR SERVICE 86

HALE PUMP ILLUSTRATED PARTS LIST 86

COMPRESSOR ILLUSTRATED PARTS LIST 86

FOAM UNIT ILLUSTRATED PARTS LIST 86

PARTS LIST 87

MAJOR ASSEMBLIES 87
SMARTCAFS200 WIRING HARNESS 89
THERMAL RELIEF VALVE 90
PARTS LIST – SUCTION MANIFOLD 92
PARTS LIST – DISCHARGE MANIFOLD 93
PARTS LIST – BELT GUARD & CAFS MIXING MANIFOLD 94
PARTS LIST – OIL FILTER & STRAINER 95
PARTS LIST – COMPRESSOR 96
PARTS LIST – SEPARATOR, OIL RESERVOIR 98

QUICK REFERENCE GUIDE/TROUBLESHOOTING 101

AIR INJECTION/CONTROL 101
COMPRESSOR OPERATION 104
CAFS OPERATION 108

LIMITED WARRANTY 110

©HALE PRODUCTS, INC. Our policy is one of continuous development. We therefore reserve the right to amend specifications without notice or obligation.

INTRODUCTION

This manual contains information relevant to HALE Series Pumps, when partnered with Compressed Air Foam Systems (CAFS) Foam unit Models 3.3, 5.0 and 6.5 and the UV SmartCAFS control system.
Distinction between the models regarding Installation, Maintenance and Operation is clearly noted with text and illustrations.

For further information on the Foam unit 3.3, 5.0 and 6.5 Foam Proportioning Systems, MDTII Manual Dual Tank Selector, Compressor and Intelli-tank Water/foam level display unit, please see the separate manuals supplied.

⚠ ATTENTION ⚠

Please read this manual before operating the pump.

CRITICAL: The pump, gearbox, separator tank and compressor assemblies are **NOT** filled with oil. These assemblies must be properly filled before operation of the CAFS system is permitted.

Correct lubrication and maintenance is essential if satisfactory performance is to be maintained.

Do not run the pump without water in the pump casing.

⚠ WARNING ⚠

THIS DSD SMARTCAFS IS AN INCOMPLETE SYSTEM FOR INSTALLATION IN A FIRE FIGHTING VEHICLE BY TRAINED INSTALLERS & DESIGNERS. THE INSTALLER OF THE SYSTEM IS RESPONSIBLE FOR PROVIDING SIGNIFICANT ELEMENTS FOR THE SYSTEM TO BE FULLY FUNCTIONAL AND OPERATIONAL. HALE PRODUCTS, INC. ASSUMES NO LIABILITY FOR INCORRECTLY INSTALLED APPLICATIONS AND NO WARRANTY WILL BE AVAILABLE FOR APPLICATIONS FAILING TO MEET THE CRITERIA OUTLINED WITHIN THIS MANUAL.

ENVIRONMENTAL PROTECTION

It is prohibited to pour engine oil and other contaminants onto the ground, down sewers, drains, or into water courses.

Dispose of lubricants through authorised waste disposal contractors, licensed waste disposal sites, or to the waste reclamation trade.

If in doubt, contact your Local Environmental Agency for advice regarding disposal policies.

©HALE PRODUCTS, INC. Our policy is one of continuous development. We therefore reserve the right to amend specifications without notice or obligation.

SAFETY - RELEVANT DATA

Thank you for purchasing a HALE Pump.

HALE Pumps are designed to give safe and reliable service. BEFORE use however, it is essential that the Operating and Installation Instructions are carefully read and understood.

MAINTENANCE

It is the responsibility of the user to ensure that the equipment is maintained in a safe operational condition. Local legislative conditions may apply.

TRAINING

It is ESSENTIAL that HALE pumps are operated ONLY by TRAINED PERSONNEL. Please contact HALE PRODUCTS, INC to discuss your training needs.
Follow the operating procedures outlined by the CAFS component suppliers in addition to the information provided here.

ATTENTION

READ ALL INSTRUCTIONS THOROUGHLY BEFORE BEGINNING ANY INSTALLATION PROCESS.

- A compressed air foam system can be a valuable firefighting tool; however, proper operation and proper tactical use of this tool needs to be addressed through training and education.
  Further education and training on foam and compressed air foam is required for effective and safe firefighting use of this equipment.
  Dry foam is not recommended for structural fire suppression or direct fire attack.

- Make sure proper personal protective equipment is used when operating or servicing the apparatus.

- Rotating drive line parts can cause injury. Be extremely careful that NO part of your body (head, feet, arms, legs, finger, hair) is in an area of rotating parts where you could be subject to injury.

- Before attempting to start the CAFS system make sure to close all manual drains and discharge valves.

- Adding compressed air to the hose line dramatically increases the energy content.
  Hose lines charged with compressed air foam have very little weight but contain large amounts of energy.

- CAFS systems add power to the water stream via compressed air. Proper education, training and nozzle selection are required for operational effectiveness and safety. Greater nozzle reaction can be expected from some nozzles.

- **Nozzle selection** – Hale does not recommend any specific type or brand of nozzle for use with CAFS systems.

  Each fire department must conduct its own evaluation to ensure an appropriate nozzle choice for the various types of hazards they expect to encounter. Each fire department or the authority having jurisdiction (AHJ) must develop associated operational procedures and

©HALE PRODUCTS, INC. Our policy is one of continuous development. We therefore reserve the right to amend specifications without notice or obligation.

guidelines. Hale Products, Inc. does not recommend or claim suitability or fitness for any given nozzle brand or style.

WARNING

ONCE A NOZZLE HAS BEEN SELECTED IT IS IMPERATIVE TO PROVIDE AMPLE TRAINING IN THE USE OF THE NOZZLE. OPEN CAFS NOZZLES SLOWLY AND MAKE SURE THE NOZZLE IS SECURED AGAINST REACTION FORCE.

- Do not remove the cap from the FS series water strainer from the CAFS system while the unit is running.
- Projectiles can cause injury. DO NOT use a blank hose cap on CAFS discharges. CAFS stores energy in the form of compressed air in the piping that could turn a blank hose cap into a projectile when removed.
- DO NOT perform maintenance on the CAFS system while the unit is running. Make sure the system is shut down and components have cooled before attempting maintenance.
- The operating pressure range of the CAFS system is 75-150 PSI [5.1-10.3 Bar]. DO NOT EXCEED 150 PSI (10.3 BAR).

CAUTION

THE PROPER OIL LEVEL MUST BE MAINTAINED IN THE AIR COMPRESSOR SYSTEM AT ALL TIMES. LOW OIL LEVEL OR NO OIL COULD RESULT IN EXCESSIVE COMPRESSOR TEMPERATURE AND POSSIBLE COMPRESSOR FIRE. OVER FILLING COMPRESSOR SYSTEM CAN RESULT IN SYSTEM MALFUNCTIONING.
THE FIRE PUMP IS EQUIPPED WITH A MECHANICAL SEAL. DO NOT RUN PUMP DRY FOR EXTENDED PERIODS OF TIME OR SEAL DAMAGE COULD RESULT.
DO NOT EXCEED 220°F [105°C] DURING COMPRESSOR SYSTEM OPERATION AS INDICATED BY THE RED INDICATOR LAMP ON THE PANEL.

- DO NOT remove or alter any guard or insulating devices or attempt to operate the system when these guards are removed. Make sure all access/service panels and covers are installed, closed and latched tight where applicable.
- DO NOT remove or alter any hydraulic or pneumatic connections, electrical devices, etc. DO NOT tamper with or disconnect safety features or modify protective guards (such as covers or doors). DO NOT add or remove structural parts.

NOISE

Operators must wear suitable EAR PROTECTION when the pump is running.

GAUGES

Do not clean the glass surfaces of the gauges with abrasive or solvent cleaners. These will cloud the glass surface. Use a mild detergent and water.

CLUTCH ENGAGEMENT

Clutch must be engaged between engine idle and engine 900 RPM to ensure clutch longevity.

©HALE PRODUCTS, INC. Our policy is one of continuous development. We therefore reserve the right to amend specifications without notice or obligation.

GENERAL DATA

COMPRESSOR

Model	Enduro 12
Maximum Operating Speed	6500 rev/min
Nominal speed of operation	5000 rev/min
Nominal power consumption	75HP[56.0kW]
Direction of rotation	Counter-clockwise (viewed on pulley)
Volume output	210 SCFM [5946 l/min] @ 125 PSI [8.6 Bar]
Operational pressure range	75-150 PSI [5.1-10.3 Bar]

PUMP

Minimum idle speed	600-700 RPM

COOLING SYSTEM

Type	Oil / Water Plate Heat Exchanger
Cooling water flow-rate	13 G/min at 100Psi [50 l/min at 7.0 Bar]

FOAM PROPORTIONING SYSTEM 3.3 - CLASS A AND B FOAM COMPATIBLE

Manufacturer	Hale Products Inc.	
Model	Foam unit 3.3	
Type	Electronic foam proportioning system	
Operating voltage	12 and 24 volt systems available	
Fuse rating 12V / 24V	60 / 40 amp	
Current draw (Operating) 12V / 24V	30 / 15 amp	
Current draw (Max) 12V / 24V	60/30 amp	
Wire size	12V / 24V	Minimum 8.5mm^2
Max. Foam Agent Flow rate	3.3 GPM [12.5 LPM]	

FOAM PROPORTIONING SYSTEM 5.0 - CLASS A AND B FOAM COMPATIBLE

Model	Foam unit 5.0
Max. Foam Agent Flow rate	5.0 GPM [19.0 LPM]

Other data as per Foam unit 3.3

FOAM PROPORTIONING SYSTEM 6.5 - CLASS A AND B FOAM COMPATIBLE

Model	Foam unit 6.5 (6.5 System Is 24VDC ONLY)
Max. Foam Agent Flow rate	6.5 GPM [24.6 LPM]

Other data as per Foam unit 3.3, 5.0

©HALE PRODUCTS, INC. Our policy is one of continuous development. We therefore reserve the right to amend specifications without notice or obligation.

LUBRICANTS

COMPRESSOR SYSTEM

Recommended: SAE 15W-40 automotive multigrade oil.
Capacity: 8~9 Quarts [7.5~8.5 litres]

PUMP GEARBOX

Recommended: SAE EP90, 80W-90 or 75W-140 Synthetic (Must meet service rating API GL-5)
Capacity: 4 quarts [3.8 litres] approximately.

CLUTCH HOUSING

Recommended: Dextron III or Mercon ATF.
Capacity: 12 oz. [0.4 litres] approximately.

MAXIMUM INPUT RPM

WARNING

EXCEEDING THESE LIMITS OR FAILURE TO FOLLOW THE RECOMMENDATIONS OUTLINED ON THIS DRAWING COULD DAMAGE THE PUMP AND RESULT IN PERSONAL INJURY.
MAXIMUM GEARBOX SHAFT TORQUE (ROAD) = 16,000 LBS-FT [21,693 N-m]

MODEL	MAX GEARBOX INPUT RPM	MODEL	MAX GEARBOX INPUT RPM
23L	2630	23X	2580
21L	2920	21X	2810
19L	3220	19X	3060

SEE HALE TORQUE LIMIT CHART F-72 FOR ADDITIONAL DATA.
MAXIMUM ALLOWABLE HYDRODYNAMIC PRESSURE: 400 PSIG
MAXIMUM ALLOWABLE HYDROSTATIC PRESSURE: 600 PSIG

©HALE PRODUCTS, INC. Our policy is one of continuous development. We therefore reserve the right to amend specifications without notice or obligation.

MODEL IDENTIFICATION SYSTEM

The HALE type pumps are available at the following NFPA ratings:

QMAX150-23LC

PUMP MODEL	PUMP		GEARBOX		ACCESSORY	
TERM	RATED CAPACITY (IMPERIAL)		L-GEARBOX		TERM	VARIANT
DSD	TERM	RATING	TERM	RATIO	C	CAFS
QMAX	75	750 GPM	19L	1.86		
QMAXXS	100	1000 GPM	21L	2.05		
QTWO	125	1250 GPM	23L	2.28		
	150	1500 GPM	X-GEARBOX			
	175	1750 GPM	TERM	RATIO		
	200	2000 GPM	19X	1.96		
	225	2250 GPM	21X	2.13		
	250	2500 GPM	23X	2.32		
	300	3000 GPM				
	350	3500 GPM				

RATED CAPACITY (METRIC)	
TERM	RATING
300M	3000 LPM
400M	4000 LPM
500M	5000 LPM
600M	6000 LPM
700M	7000 LPM
800M	8000 LPM
900M	9000 LPM
1000M	10000 LPM
1200M	12000 LPM
1400M	14000 LPM

For example, the QMAX pump specified above has a 1500 GPM rating with a 2.28 rear ratio in the CAFS configuration. The pump model identification is at the bottom of the gearbox:

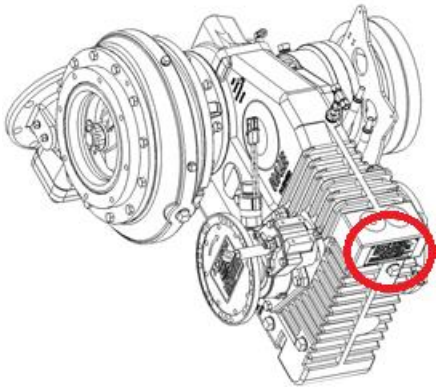

Figure 1 Gearbox Identification Placard

©HALE PRODUCTS, INC. Our policy is one of continuous development. We therefore reserve the right to amend specifications without notice or obligation.

RECOMMENDED FOAM AGENTS

Hale Foam unit Models 3.3, 5.0, 6.5 can be used with the foam concentrates specified on the Hale Foam Proportioning System Foam Concentrate Compatibility List Hale Bulletin #650, Rev 33, 11-11-11. Check Hale website for the latest updates.

The foam concentrates in the list have been tested by Hale Products to ensure compatibility with Foam unit systems. This information is intended to assist the end user (AHJ) in selecting compatible foam concentrate(s) but is not a determination of firefighting efficiency. Always consult local application and environmental regulations before selecting the foam concentrate and refer to the Foam unit user manual for additional information.

©HALE PRODUCTS, INC. Our policy is one of continuous development. We therefore reserve the right to amend specifications without notice or obligation.

MAJOR COMPONENTS AND CONTROLS

GENERAL ARRANGEMENT

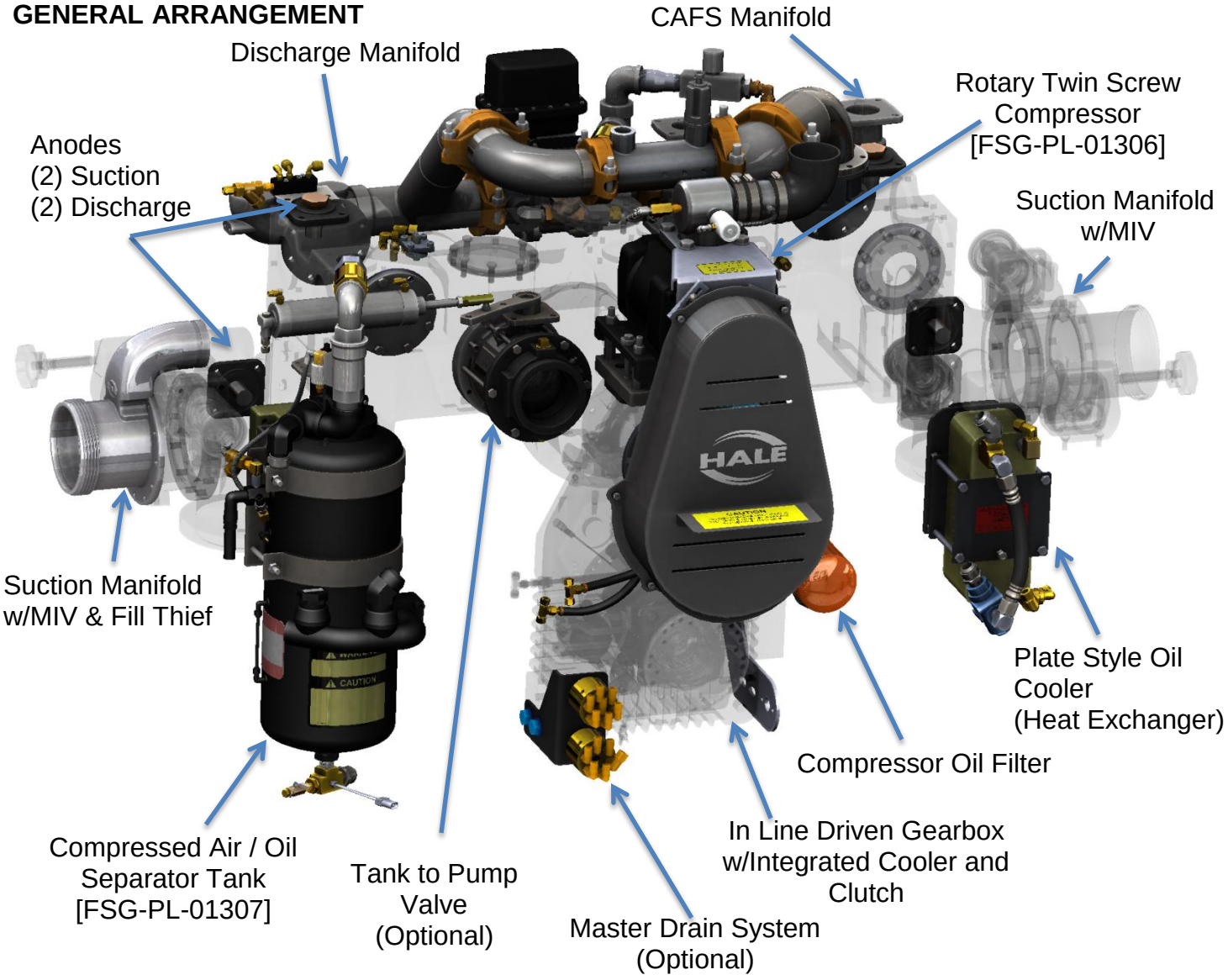

Figure 2 Q-SERIES version shown. Drawing numbers are shown in brackets [FSG-PL-XXXXX].

©HALE PRODUCTS, INC. Our policy is one of continuous development. We therefore reserve the right to amend specifications without notice or obligation.

(a) Volute Style Pump

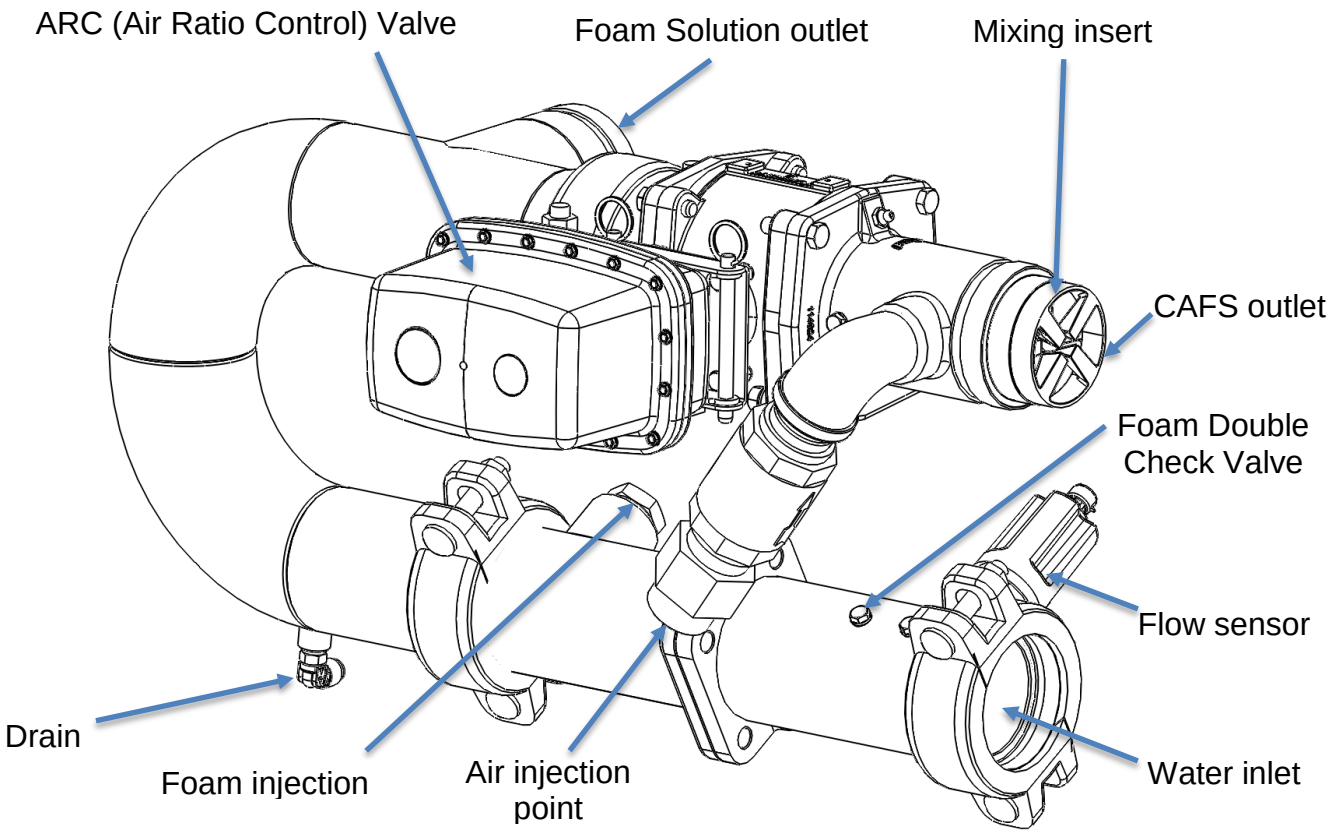

Figure 3 DSD CAFS Mixing Manifold

©HALE PRODUCTS, INC. Our policy is one of continuous development. We therefore reserve the right to amend specifications without notice or obligation.

(b) High Pressure

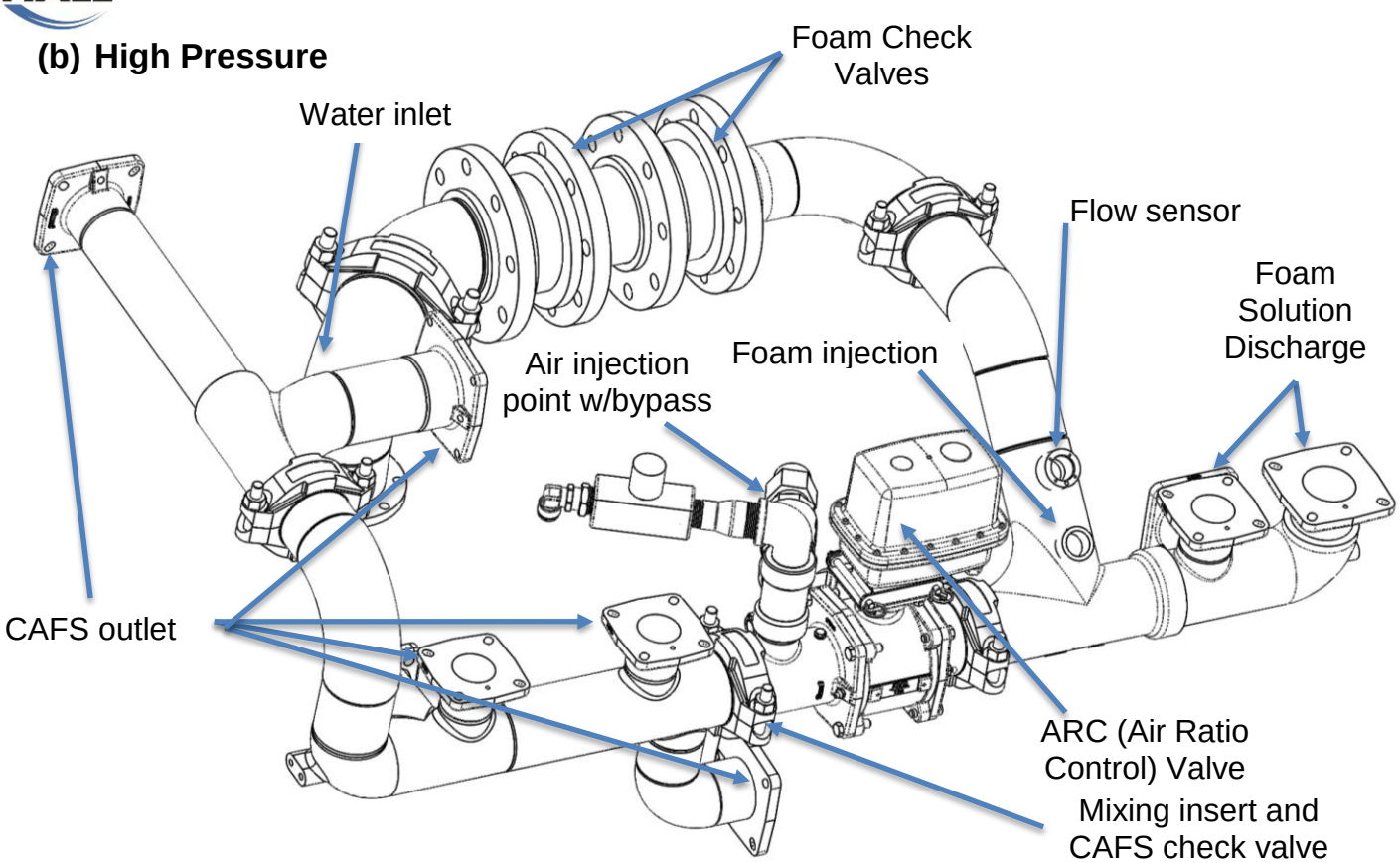

Figure 4 QTWO High Pressure CAFS Discharge

(c) Standard Pressure

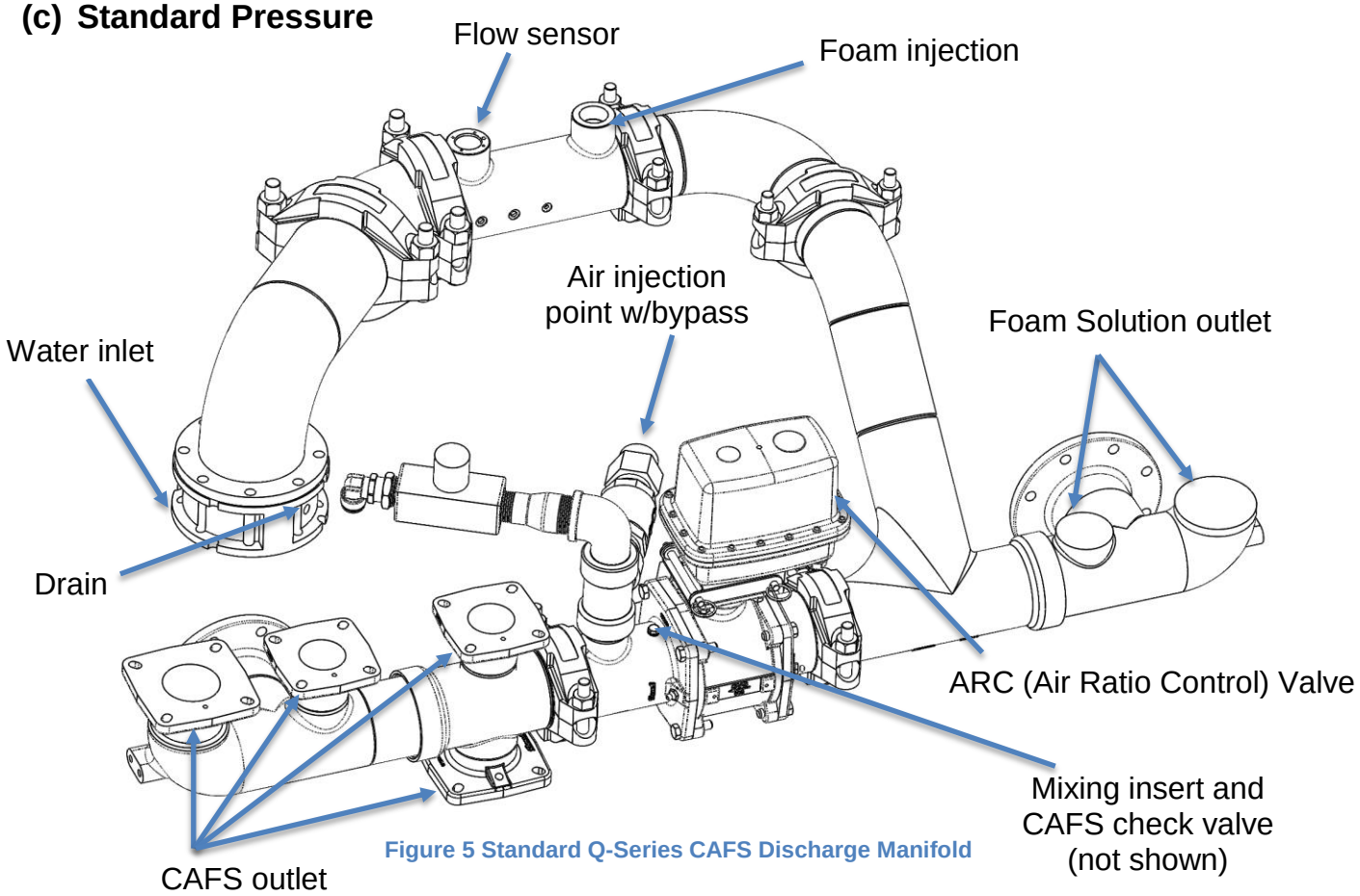

Figure 5 Standard Q-Series CAFS Discharge Manifold

©HALE PRODUCTS, INC. Our policy is one of continuous development. We therefore reserve the right to amend specifications without notice or obligation.

FOAM UNIT 3.3, 5.0, 6.5 FOAM PUMP COMPONENT GROUP

NOTE: *Hale Foam unit 3.3, 5.0 or 6.5 foam pump is supplied loose for mounting by vehicle builder.*

Figure 6 Foam Pump

Figure 7 In-Line Strainer

Figure 8 Water Strainer

Figure 9 ADT Selector

Figure 10 MDT Selector

Figure 11 MST Selector

Figure 12 Bottom Low Level Tank Sensor

Figure 13 Side Low Level Tank Sensor

Figure 14 Top Low Level Tank Sensor

©HALE PRODUCTS, INC. Our policy is one of continuous development. We therefore reserve the right to amend specifications without notice or obligation.

CONTROL PANEL - SMARTCAFS

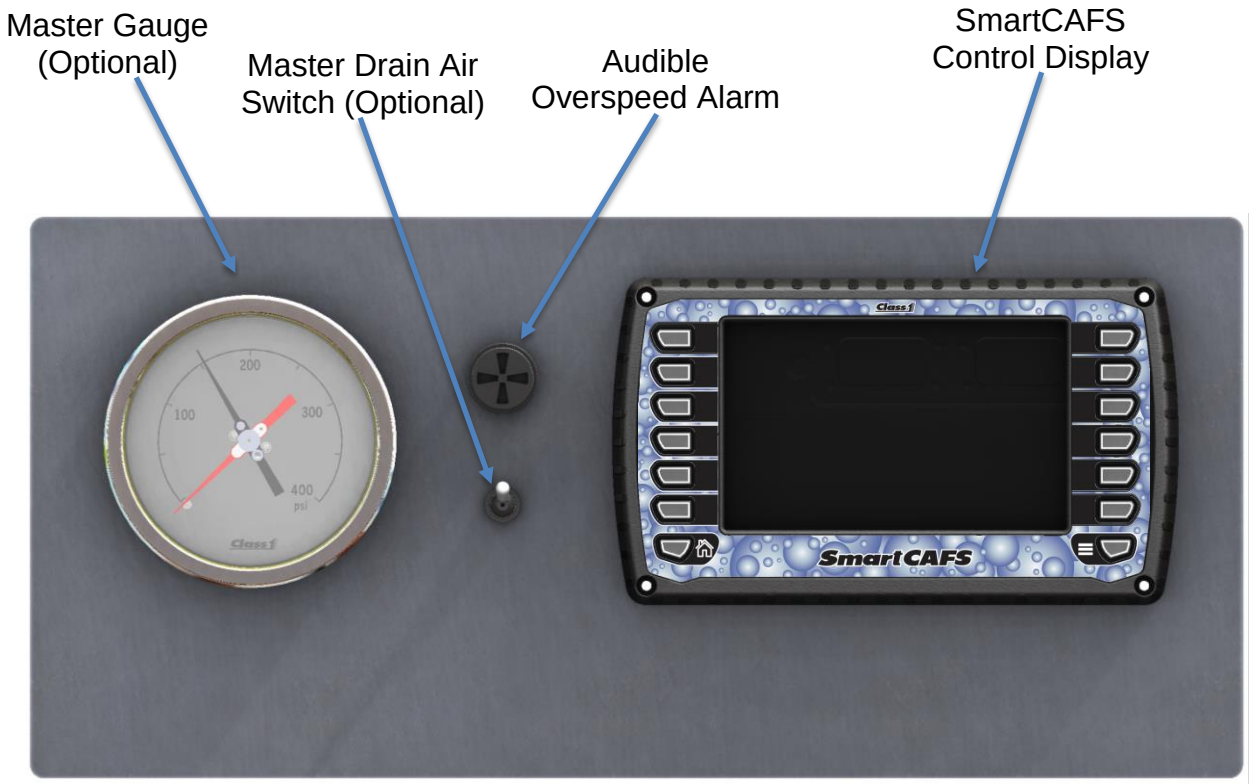

Figure 15 SmartCAFS Testing Panel

COMPONENT PANEL CUT-OUT DIMENSIONS

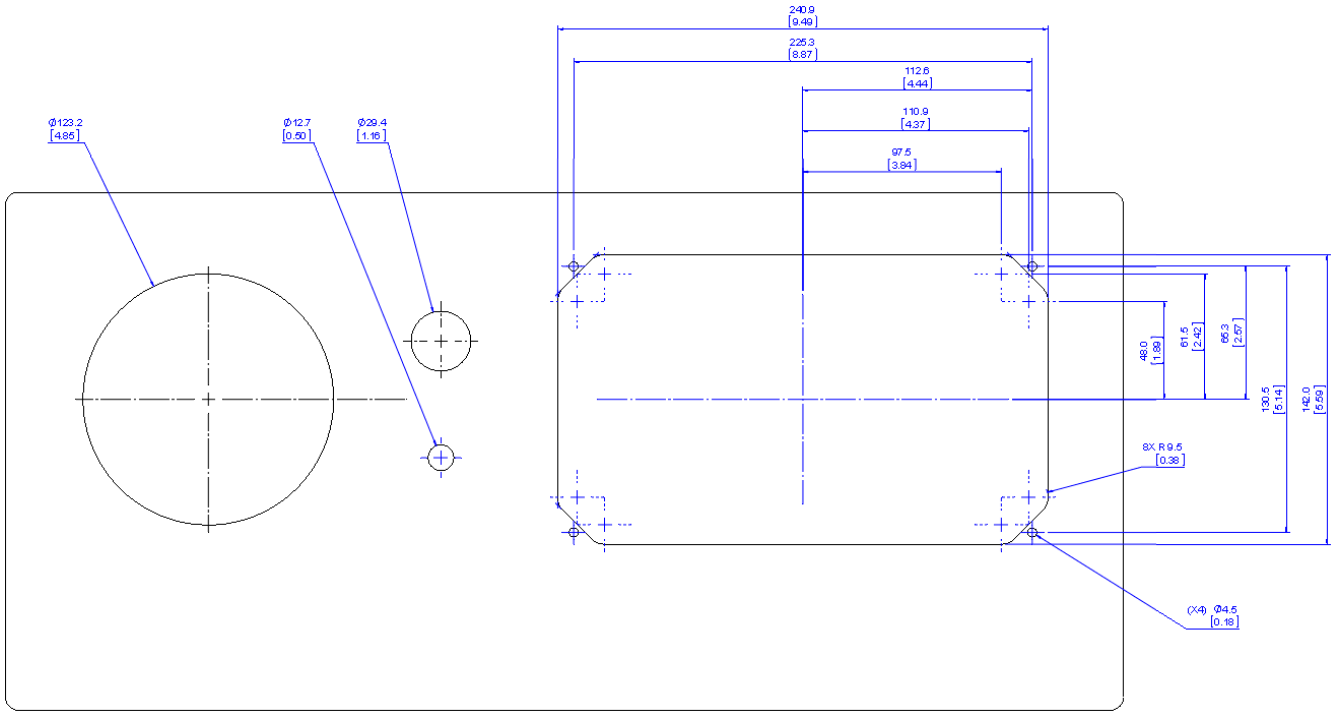

Figure 16 Installation Cut-out Dimensions

©HALE PRODUCTS, INC. Our policy is one of continuous development. We therefore reserve the right to amend specifications without notice or obligation.

SYSTEM OVERVIEW

The SmartCAFS is a Compressed Air Foam System comprising of two major components (in addition to the main water pump) – Air compressor system (with separate heat exchanger and oil/water separator) and Foam unit system (foam proportioning unit).
The Foam unit foam pump and motor assembly is mounted separately from the water pump and is designed to be remotely mounted according to the Foam unit Installation Manual.

A metered amount of foam concentrate is introduced into the manifold and mixed with water from the pump discharge manifold to produce a solution. The foam and water solution is then fed to a control valve (ARC) where wet or dry foam may be selected (air ratio control section of manifold). Compressed air is then injected and the resulting foam / water / air combination is completely mixed by the X-mixers inside the discharge manifold creating CAFS discharge flow.

SAFETY INTERLOCKS ARE PROVIDED TO ENSURE THAT:

1. Foam concentrate cannot be introduced unless water is flowing through the unit. Compressed air cannot be introduced unless foam concentrate is flowing.

2. 'Slugging' (unmixed air and water) in the discharge line is prevented. Air cannot be injected in the absence of foam and water.

3. Air injection when the foam tank is empty is prevented. Foam tank low level switches are provided and MUST be fitted.

COMPRESSOR

The rotary twin-screw compressor is rated at 210 SCFM [5946 l/min] @ 125 PSI [8.6 Bar] per NFPA and is driven by a synchronous belt. The compressor is engaged, or disengaged from the pump drive at idle, via an air-operated, oil lubricated friction plate clutch.

OIL COOLER

Compressor lubricating oil is cooled by water taken from the main pump, via the water supply line; cooling water being supplied from pump delivery and returned to truck tank. The compressor will reject up to 43HP [32.0 kW] of heat energy to cooling. The installer must consider this additional thermal load.
When the compressor is turned off, residual system pressure is vented by a blow-down valve. The system should not store compressed air energy when shut off.

NOTE: *The compressor should not be run without cooling water and proper oil level for both the compressor and separator tank.*

SEPARATOR TANK

The separator tank holds the oil required for lubricating the compressor and separates the oil from the oil/air mix discharged from the compressor. The separator tank also has a minimum pressure valve that ensures that air pressure is maintained above 43.5PSI [3 bar] to maintain correct lubrication.

©HALE PRODUCTS, INC. Our policy is one of continuous development. We therefore reserve the right to amend specifications without notice or obligation.

MANIFOLD

The manifold incorporates an ARC Valve [air ratio control valve] through which degrees of wet or dry foam mixture can be selected. Compressed air is then injected and the resulting foam / water / air combination is thoroughly mixed by the X-mixers during discharge.

For salt water compatible foams or a specific solution's effectiveness while using salt water, seek advice from the foam agent manufacturers.

FOAM UNIT - FOAM PROPORTIONING SYSTEM

The Foam unit system consists of three main components:

1) Foam Pump / Motor Assembly.
2) Control Panel (integral with main pump control panel).
3) Flow measurement and injection manifold.

All three elements combine to provide accurate foam proportioning. From the control panel the operator can initiate the system, adjust the foam ratio, monitor 'real time' water flow rate and record total water and foam concentrate usage.

Foam concentrate is only injected when the foam button has the **RED** selector around the control button.

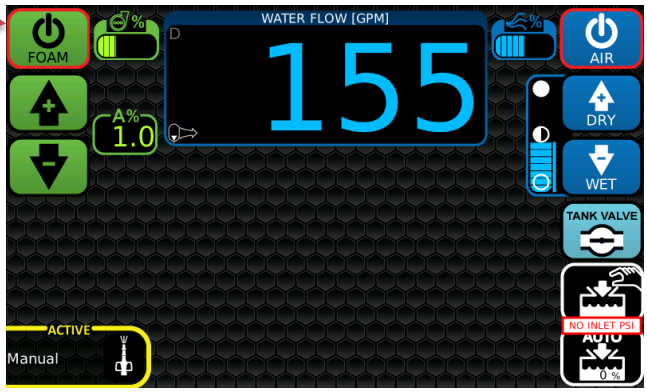

Figure 17 SmartCAFS Foam/CAFS Screen

The Foam unit 3.3, 5.0, 6.5 system for Class A or B foams, will inject foam in the range of 0.1% to 10.0%.
Further information is available in the **Foam unit Model 3.3/5.0/6.5** Description, Installation and Operation manual.

©HALE PRODUCTS, INC. Our policy is one of continuous development. We therefore reserve the right to amend specifications without notice or obligation.

FOAM UNIT 3.3, 5.0, 6.5 SYSTEM – REMOTE MOUNTED

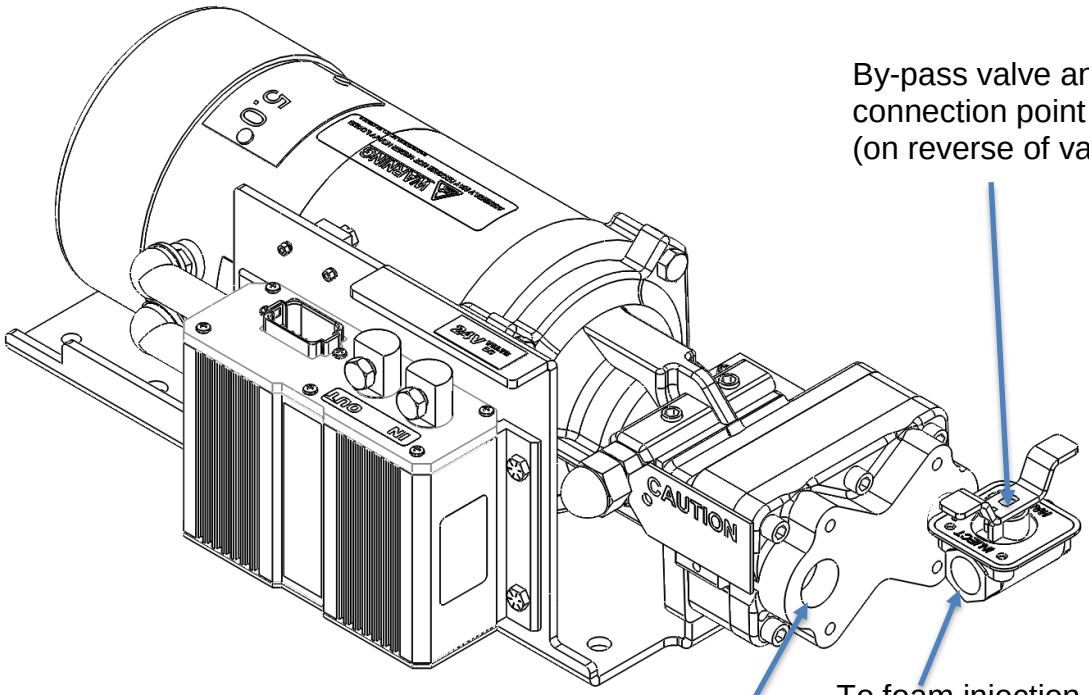

Figure 18 Foam unit 5.0 Pump

By-pass valve and connection point (on reverse of valve)

To foam injection point on manifold. 13mm (1/2inch) NPT Tubing suitable for 300PSI [22.5 bar] pressure

Inlet from foam strainer,
Models 3.3, 5.0 – 19mm (3/4inch) NPT
Model 6.5 – 25.4mm (1inch) NPT

Note: Foam tank must be located above FoamLogix unit.

Also refer to installation notes in FoamLogix manual.

©HALE PRODUCTS, INC. Our policy is one of continuous development. We therefore reserve the right to amend specifications without notice or obligation.

FOAM UNIT DIMENSIONS

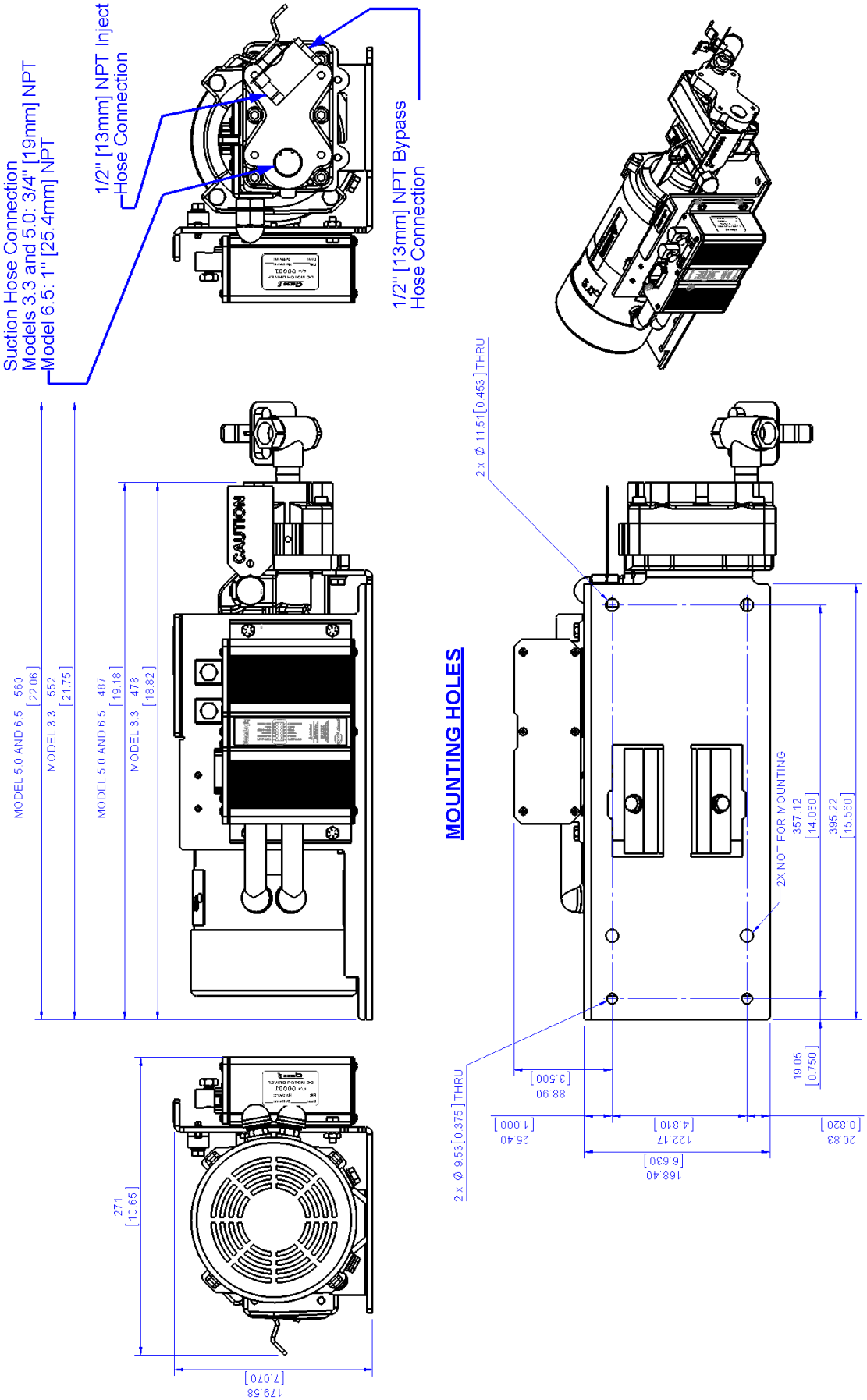

©HALE PRODUCTS, INC. Our policy is one of continuous development. We therefore reserve the right to amend specifications without notice or obligation.

INSTALLATION AND INITIAL SET-UP

The following connection points should be considered when installing the DSD SmartCAFS assembly into a vehicles frame.

LIFTING POINTS

Secure handling of the unit for installation and maintenance is vital. Use only the lifting points noted below.

- Primary lift point is the main Gearbox mount bracket.
- Front to rear “balance” lift point is the suction manifold.
- Do NOT use the discharge manifold as a lift point.

STRAP LIFT POINTS

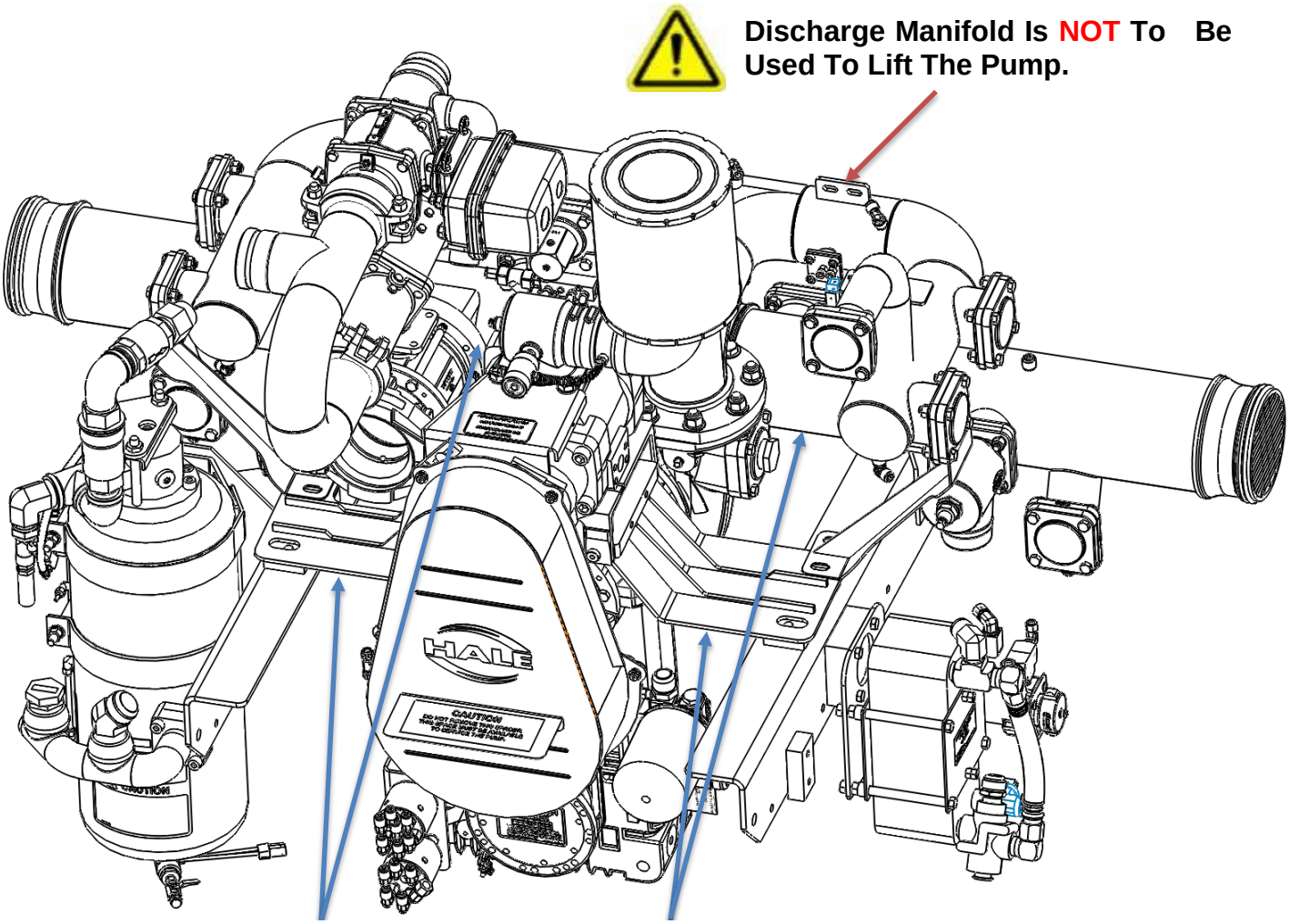

Main Support Bracket & Suction Manifold, Inboard of Frame Mounting Rails.

©HALE PRODUCTS, INC. Our policy is one of continuous development. We therefore reserve the right to amend specifications without notice or obligation.

DRIVE LINE

Flange Series	Qty.	Size
1600, 1610 1650, 1700 1710	8	3/8" (9.5mm)
1780, 1800 1810	12	7/16" (11mm)

For driveline flange connection, appropriate driveline, shouldered hardware in the quantity and size specified must be used.

Due to the increasing sophistication of fire apparatus and truck design, there is potential for an increase in the number of driveline problems.

These problems include: drive shaft failure, loosened drive ends on pump gearboxes, broken mounting brackets, driveline joint or slider wear, bearing wear on pumps or rear axles, and vibrations at specific road speeds. While the incidence of these problems is low, they are expensive to fix yet easy to avoid.

It is critical to use computer driveline analysis software, such as Dana's "The Expert," during driveline layout. Dana's software is available free on the World Wide Web at:

http://www2.dana.com/expert/

While using the software, perform three separate driveline analyses:

- Front drive shaft assembly
- Rear drive shaft assembly
- Total system

Ensure individual shaft cancellation and correct phasing.

When performing calculations, strive to achieve the lowest driveline torsional and inertial vibrations, making sure to avoid severe driveline angles. Be conservative and always err on the side of SAFETY. Always measure the drive shaft after construction to make sure it matches the computer design.

Remember the following points while designing a driveline.

- Problems can occur with or without noticeable vibration.
- Suspension travel and torque wrap-up can change a marginal driveline into one that is unacceptable. Always consider the full movement of the driveline.
- Center your driveline sliders and ensure they have sufficient travel to allow for the entire movement of the suspension.
- Do not measure driveline angles using a bubble protractor. Instead, use a digital inclinometer. Remember to zero the inclinometer on the truck frame, not the ground.
- Split-shaft drivelines inherently have yoke phasing that can change with every shift. This is one reason to design the other aspects of the drive-line more conservatively than a "non-split shaft" truck driveline. Long drivelines can lead to component vibration or failure. As the driveline approaches half critical speed, a vibration can occur that could damage driveline components. This is much more critical in fire apparatus with split shaft pumps. The phasing

©HALE PRODUCTS, INC. Our policy is one of continuous development. We therefore reserve the right to amend specifications without notice or obligation.

between the front and rear shafts changes every time the pump is used.

Maximum Recommended Driveline Lengths lists the maximum driveline length using a safety factor of 42% of critical speed. This table is based on a 0.134" (3.4 mm) wall thickness.

Shaft RPM	2.0 (51)	2.5 (64)	3.0 (76)	3.5 (89)	4.0 (102	4.5 (114)
2,400	47 (1,194)	53 (1,346)	58 (1,473)	63 (1,600)	76 (1,702)	71 (1,803)
2,600	45 (1,143)	51 (1,295)	55 (1,397)	60 (1,524)	64 (1,626)	68 (1,727)
2,800	44 (1,118)	49 (1,245)	53 (1,346)	58 (1,473)	62 (1,575)	65 (1,651)
3,000	42 (1,067)	47 (1,194)	52 (1,321)	56 (1,422)	60 (1,524)	63 (1,600)
3,200	41 (1,041)	46 (1,168)	50 (1,270)	54 (1,372)	58 (1,473)	61 (1,549)
3,400	39 (991)	44 (1,118)	48 (1,219)	53 (1,346)	56 (1,422)	59 (1,499)
3,600	38 (965)	43 (1,092)	47 (1,194)	51 (1,295)	55 (1,397)	58 (1,473)
3,800	37 (940)	42 (1,067)	46 (1,168)	50 (1,270)	53 (1,346)	56 (1,422)
4,000	36 (914)	41 (1,041)	45 (1,143)	48 (1,219)	52 (1,321)	55 (1,397)

- Although wall thickness does not have a significant effect on drive shaft length for this calculation, it does have some effect. Contact driveline supplier for additional information.

- Extremely short drive lengths between the pump and the rear axle can also cause problems from excessive operating angles when the suspension articulates. Use caution and conservative design values when utilizing air ride suspension and short rear drivelines.

- For application assistance and approval, contact a driveline equipment manufacturer, such as Spicer/Dana or Meritor.

Position the unit onto the truck frame in the required location.

- Bolt the pump frame rails onto the truck frame. (DSD Unit pictured).

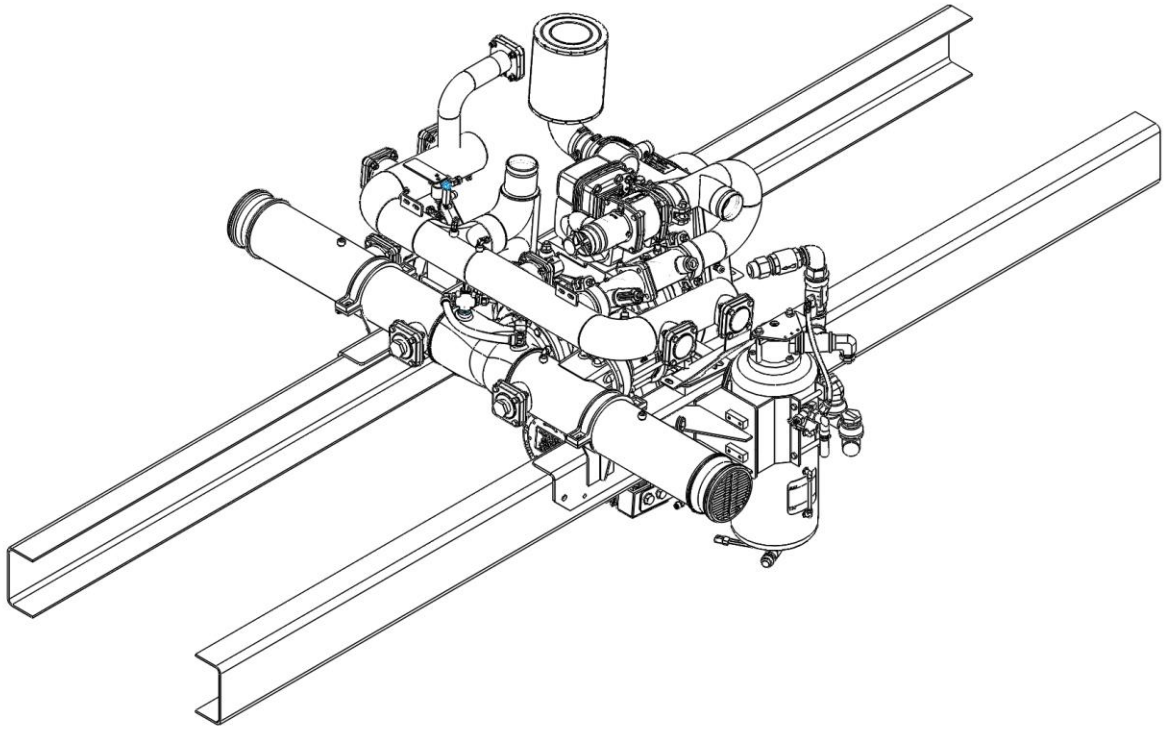

Figure 19 DSD Frame Rail Placement

©HALE PRODUCTS, INC. Our policy is one of continuous development. We therefore reserve the right to amend specifications without notice or obligation.

PUMP CLEARANCE

- Pump service area is depicted within the zones illustrated below. DSD unit pictured, but clearances for drive belt and anodes are common among all units.
- A pump clearance plate is installed to the pump guard to ensure proper clearance for major pump service. This plate must remain on the pump.
- Suction manifold: Anode service areas are also required.
- DO NOT install any other components in this area that cannot be easily removed.

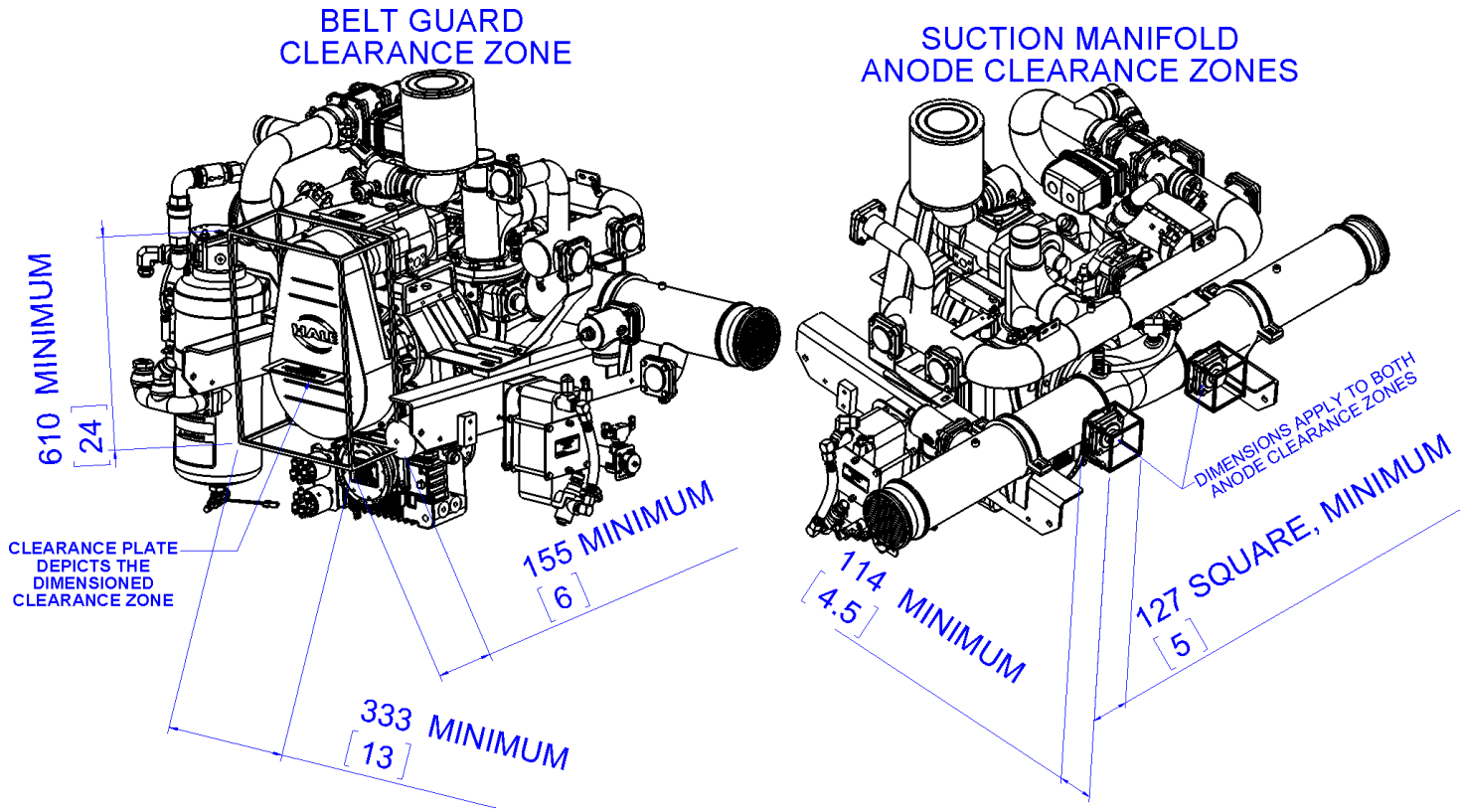

Figure 20 Service Zones Pictured (Dimensions are recommended minimums)

©HALE PRODUCTS, INC. Our policy is one of continuous development. We therefore reserve the right to amend specifications without notice or obligation.

PANEL STRAINER

- The CAFS system cooling water strainer is mounted to the pump panel through a 2-1/8” (54 mm) hole, with the supplied placard as shown in **Figure 22**.
- Plumb 3/8” (9.5 mm) tubing between the tee, mounted on the bottom of the strainer, and the drain valve.
- Also see Plate # PL977 for additional info.

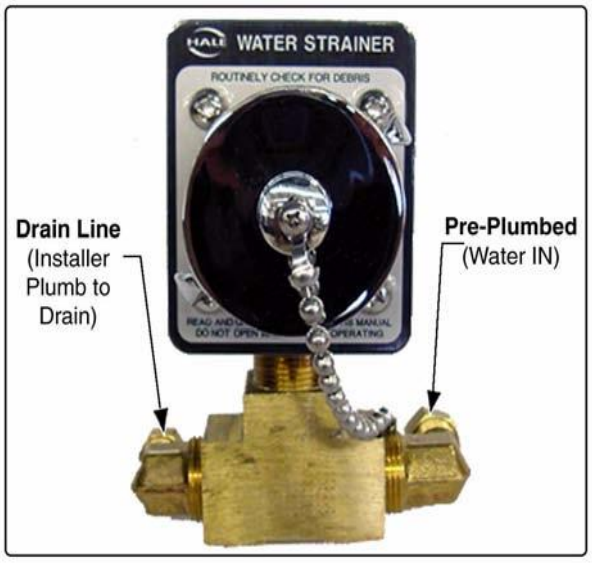

Figure 21 Water Strainer Plumbing

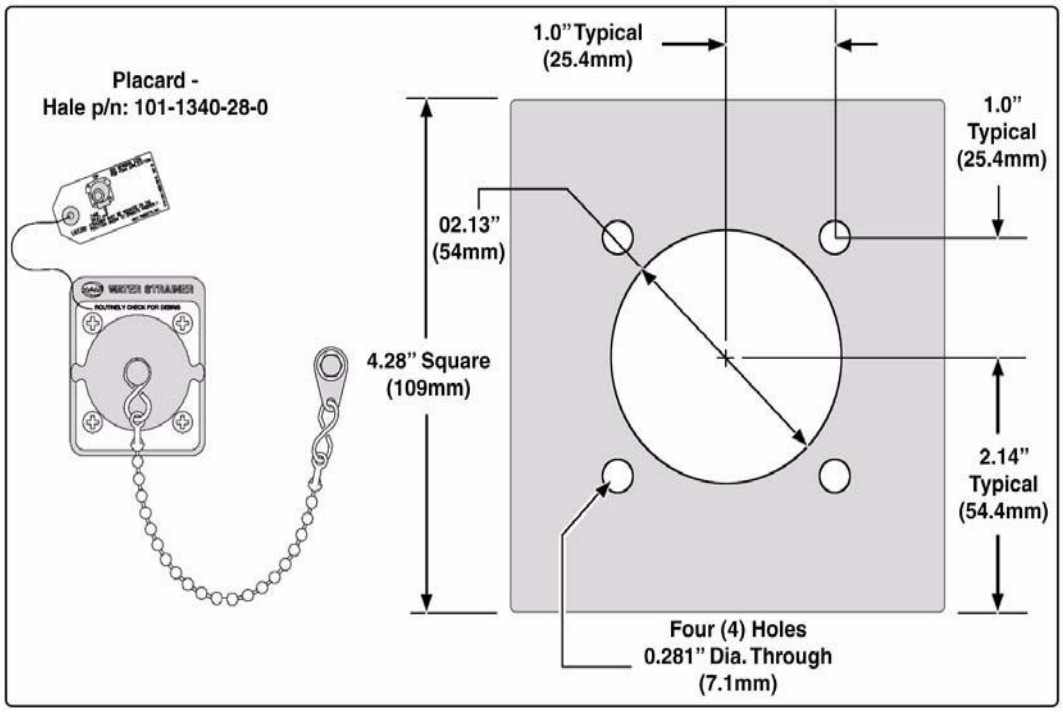

Figure 22 Water Strainer Cut-out

©HALE PRODUCTS, INC. Our policy is one of continuous development. We therefore reserve the right to amend specifications without notice or obligation.

COMPRESSOR CONNECTIONS

- For reliable operation, the CAFS air filter must be located in a clean, fresh-air environment, usually in the dunnage area above the pump compartment. DO NOT damage the filter during assembly and be sure the mounting area offers protection.

- Mount the air filter 6” (152 mm) MINIMUM above the decking platform to prevent standing water from being sucked into the filter and possibly back into the system. (See Figure 24)

- Use 3” (76.2 mm) CPVC or aluminum pipe and rubber connections. Support the piping with brackets as needed.

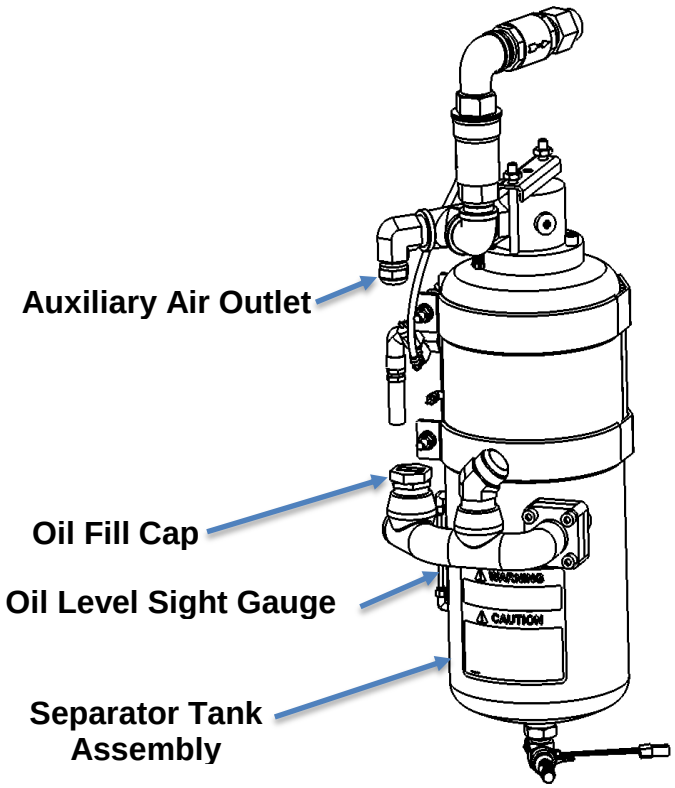

Figure 23 Separator Part Identification

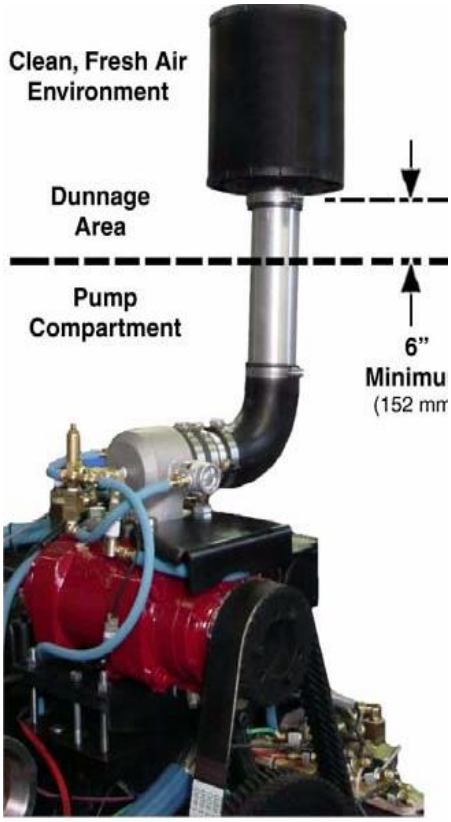

Figure 24 Air Intake Installation

- An auxiliary air outlet for rescue tools and testing can be provided. Refer to NFPA CAFS testing requirements. A fitting is provided, with JIC cap, on the outlet of the separator tank.

CAUTION

If the auxiliary air is connected & used for rescue tools, the DSD pump should be connected to a fresh water source to prevent overheating of the compressor as the cooling system for the compressor relies on a continuous fresh water source. If the truck tank is the only water source for cooling the compressor, the auxiliary air source can be utilized for a shorter period of time depending on the truck’s tank size.

- Remove the protective cap, and install an appropriate hose. Use 3/4” (19 mm) to 1” (25.4 mm), wire reinforced hose for maximum air flow. For example, Aeroquip FC350-16, 1” (25.4 mm) wire reinforced hose.

©HALE PRODUCTS, INC. Our policy is one of continuous development. We therefore reserve the right to amend specifications without notice or obligation.

- A quick disconnect and ball valve should be installed on the panel to control air flow from aux air outlet.

COMPRESSOR OIL SERVICE ACCESS

- To allow access for compressor and pump servicing, a panel with approximately 450 square inches of area and no dimension less than 18” (457 mm) must be provided.

- Include a service door to inspect the receiver tank oil level and provide access to the oil fill fitting. The service door should measure 14” x 14” (356mm) minimum. See figure below.

⚠ CAUTION ⚠

DO NOT REMOTE CONNECT OR EXTEND THE OIL FILL LINE. EXTENDING THIS LINE ALLOWS FOR POSSIBLE OVERFILL WHICH WILL CAUSE SERIOUS DAMAGE TO THE COMPRESSOR.

Affix the WARNING / CAUTION decal (Hale P/N 101-1410-01-0) to the inside of the receiver tank service door.

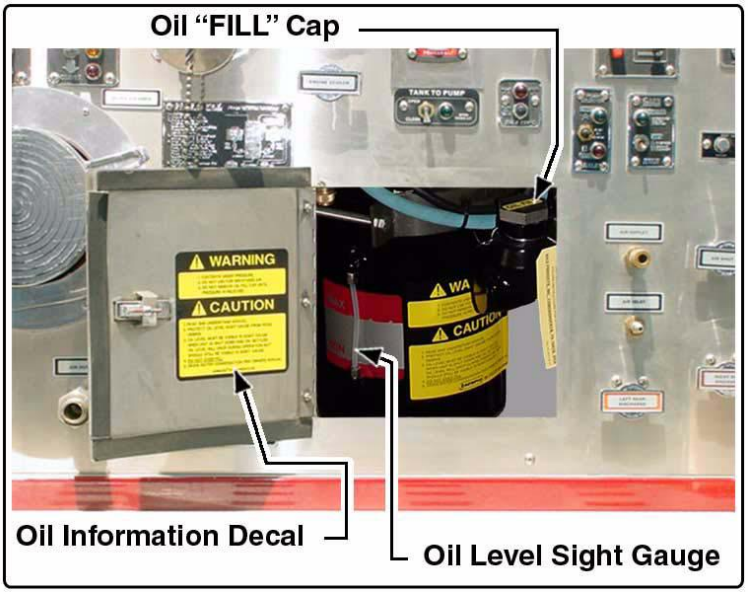

Figure 25 Service Panel Example

©HALE PRODUCTS, INC. Our policy is one of continuous development. We therefore reserve the right to amend specifications without notice or obligation.

Fluid Drain Points

1. For detailed operation, maintenance & care of the DSD SmartCAFS pump, refer to 8FG/DSD Series HIGH Volume Pumps; Operation and Maintenance Manual (Document number 029-0020-93-0). For Q-Series, refer to 029-0020-63-0 Muscle Pump manual.
2. Clutch Fluid Drain & Gearbox Oil Drain.

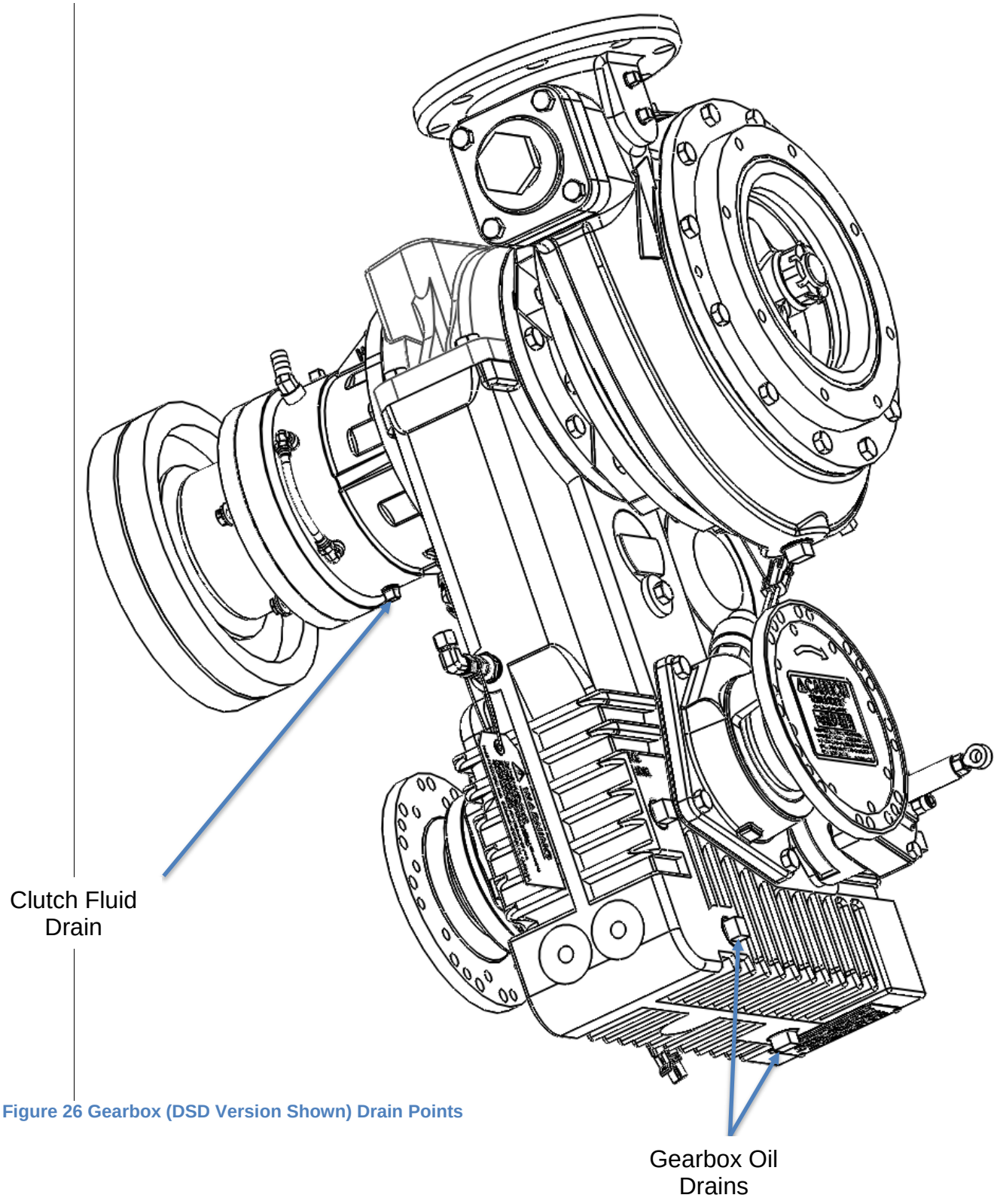

Figure 26 Gearbox (DSD Version Shown) Drain Points

©HALE PRODUCTS, INC. Our policy is one of continuous development. We therefore reserve the right to amend specifications without notice or obligation.

WATER DRAIN – VOLUTE STYLE

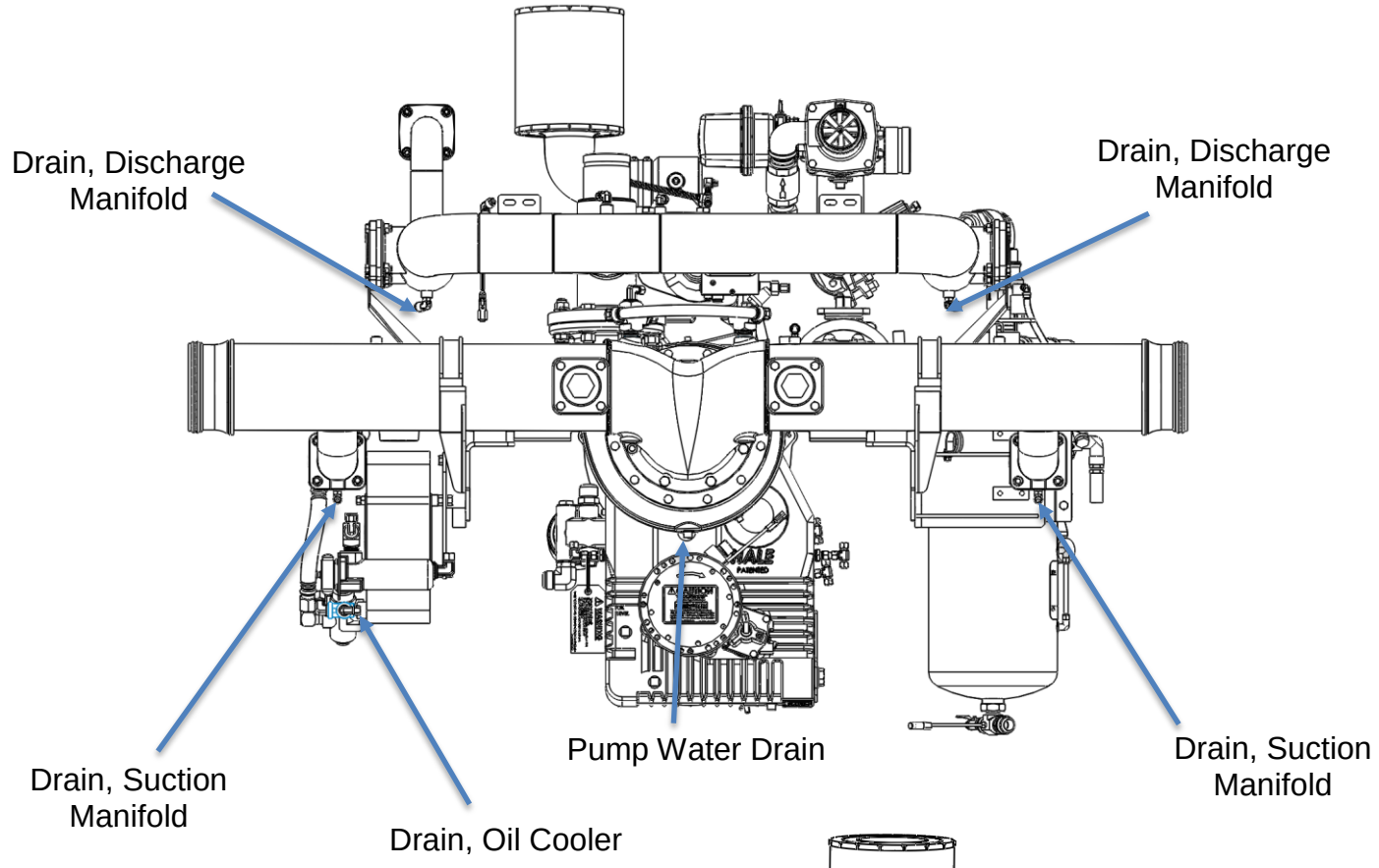

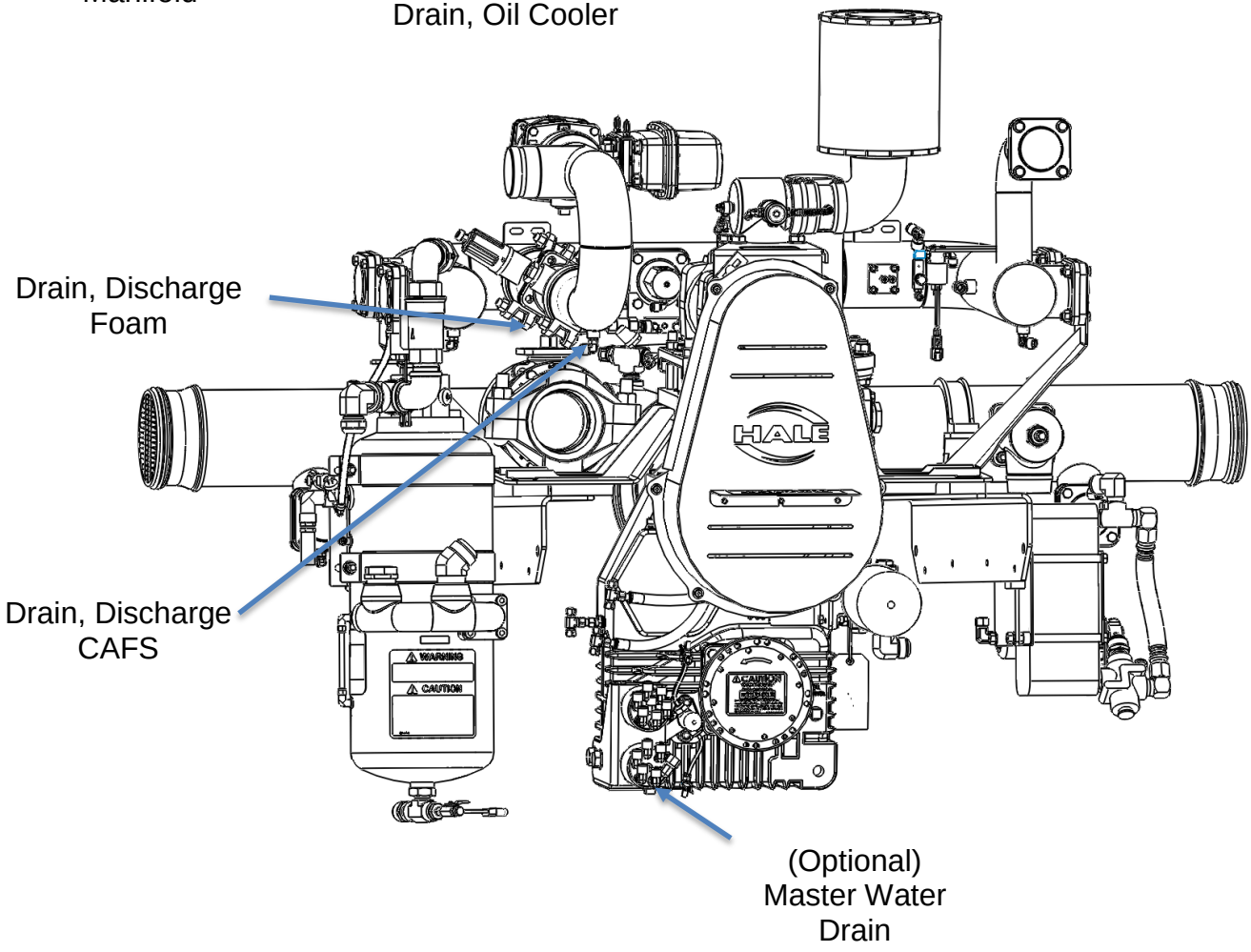

©HALE PRODUCTS, INC. Our policy is one of continuous development. We therefore reserve the right to amend specifications without notice or obligation.

WATER DRAIN – Q-SERIES

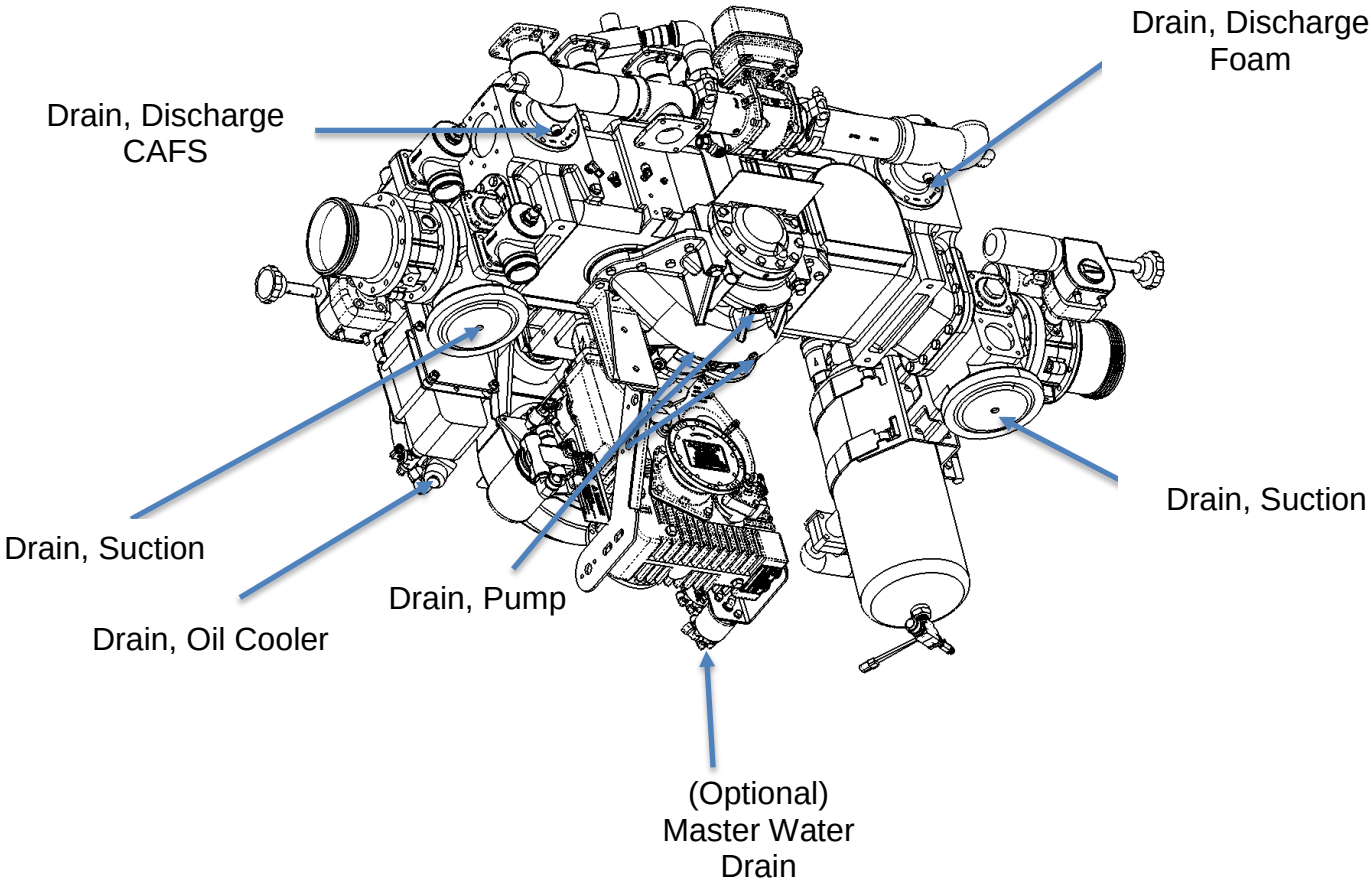

©HALE PRODUCTS, INC. Our policy is one of continuous development. We therefore reserve the right to amend specifications without notice or obligation.

SYSTEM OIL FILL

OIL FILLING POINTS

The unit is supplied **without** oil and must be filled with the correct quantity and specification before starting the pump.

ADDING OIL

Before operating the CAFS system, oil must be added to the pump gearbox and the separator tank.

GEARBOX

The oil filling point for the Gearbox housing is located as shown.

GEARBOX OIL FILLING AND CHECKING

Fill the gearbox until the oil flows from the oil fill point. This is the only accurate method of checking that the correct amount of oil has been added to the gearbox, as it allows for different sizes of gear ratios.

- Fill the pump gearbox to the proper level (see 029-0020-63-0 Muscle Pump manual for details). Oil must be SAE EP90, 80W90 or Synthetic 75W-140 gear oil (with an API service rating of GL5).

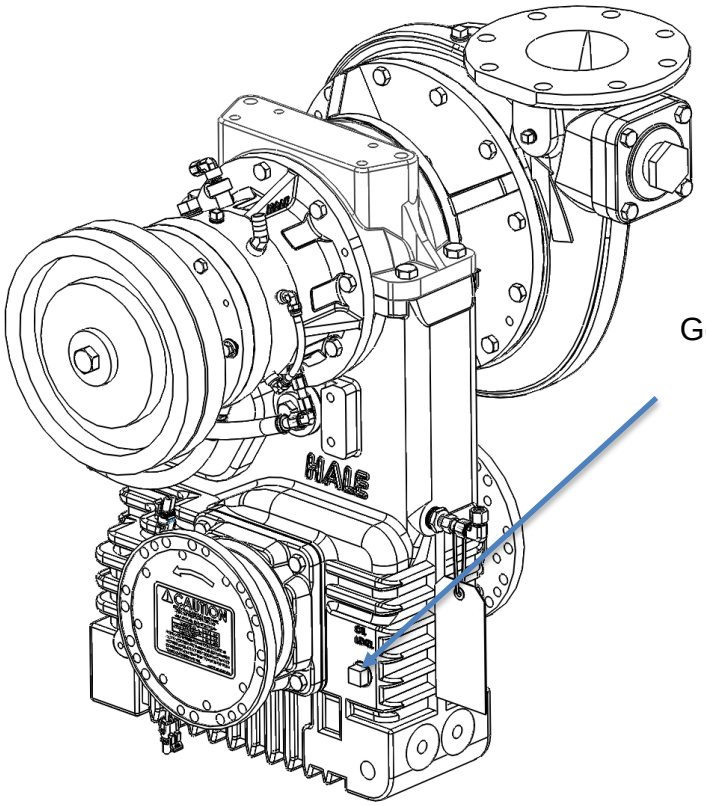

Figure 27 Gearbox Oil Level Check Location (DSD Version Shown)

©HALE PRODUCTS, INC. Our policy is one of continuous development. We therefore reserve the right to amend specifications without notice or obligation.

OIL SEPARATOR TANK

WARNING

BEFORE RUNNING THE APPARATUS OR ENGAGING THE PUMP FOR THE FIRST TIME, MAKE SURE THE COMPRESSOR SYSTEM IS FILLED WITH THE APPROPRIATE OIL. AFTER THE INITIAL OIL FILL, ENGAGE THE PUMP AND ALLOW IT TO RUN FOR 10 SECONDS THEN SHUT THE SYSTEM DOWN. ALLOW OIL TO SETTLE, THEN CHECK OIL AND REFILL ACCORDINGLY.

- A heat exchanger is employed to water-cool the compressor, pump and gearbox as the oil passes through.

WARNING

MAINTAIN A “FULL” OR NEAR-FULL TANK OF WATER TO AVOID OVERHEATING. WHEN THE TANK IS AT “LOW LEVELS” AND OPERATING FOR LENGTHS OF TIME, WITH THE VALVE CLOSED, TANK WATER COULD OVERHEAT.

- Run the pump at IDLE, with the compressor engaged for 30 seconds, then shut it down.
- The oil level should settle within ten minutes to halfway up the sight tube, as noted on the fill decal (See Figure 28).
    - **Recommended:** SAE 15W-40 automotive multigrade oil
    - **Capacity**: 8~9 Quarts [7.5~8.5 litres]

©HALE PRODUCTS, INC. Our policy is one of continuous development. We therefore reserve the right to amend specifications without notice or obligation.

Separator Tank for Compressor Oil

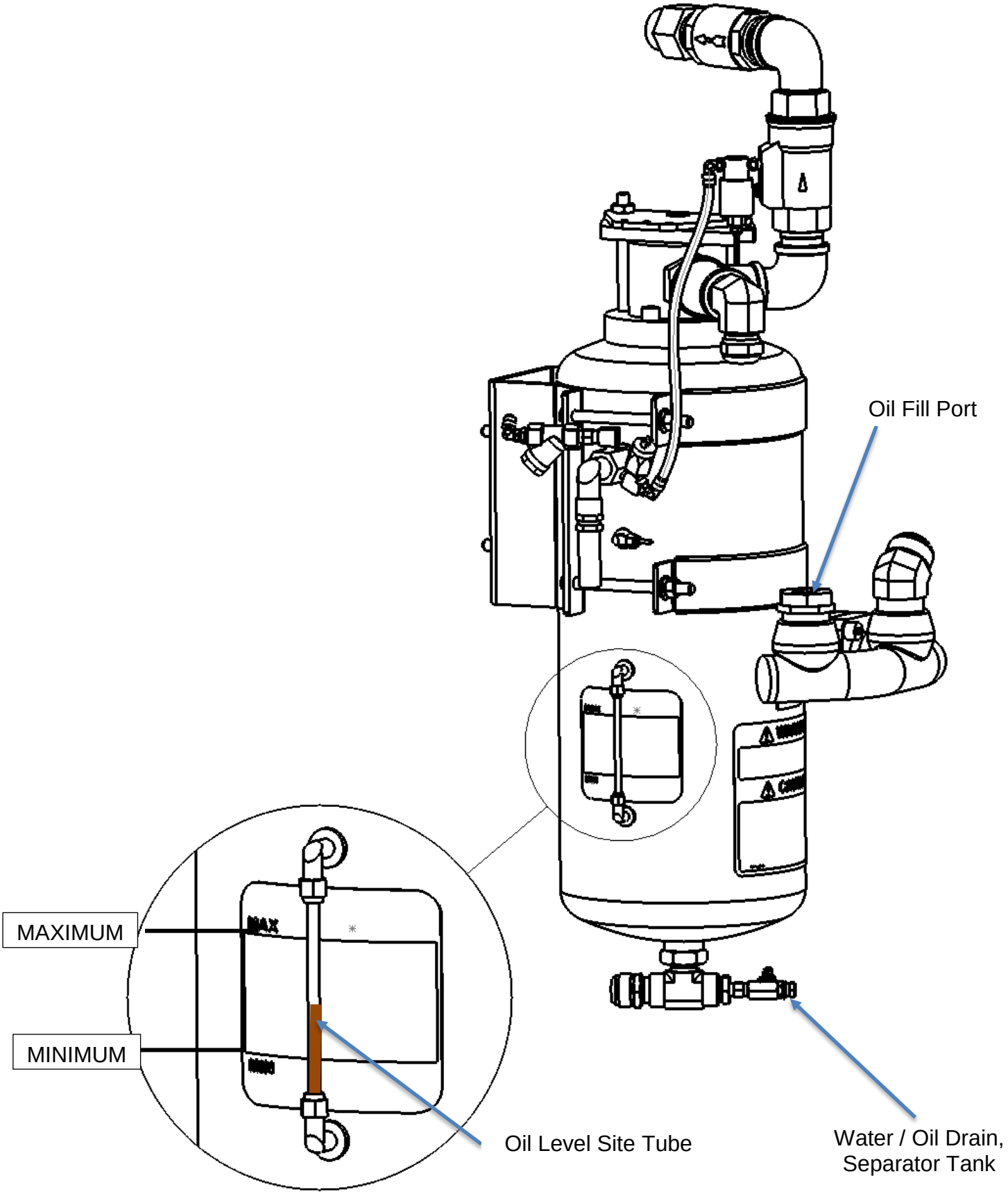

Figure 28 Separator Oil Fill and Drain Identification

©HALE PRODUCTS, INC. Our policy is one of continuous development. We therefore reserve the right to amend specifications without notice or obligation.

- Check system for oil leaks – repair any immediately.
- If no leaks are present and oil level is correct, proceed with foam system calibration.

HOT-SHIFT CLUTCH HOUSING

- The Hot-Shift clutch housing is shipped from the factory with oil.
- Before operating the CAFS system, check that the oil level sight tube is filled halfway between the top and bottom.
- If needed, fill the front clutch housing to the proper level using Dexron III or Mercon ATF. The front clutch housing holds approximately 12 oz. (0.4 liters) of oil.

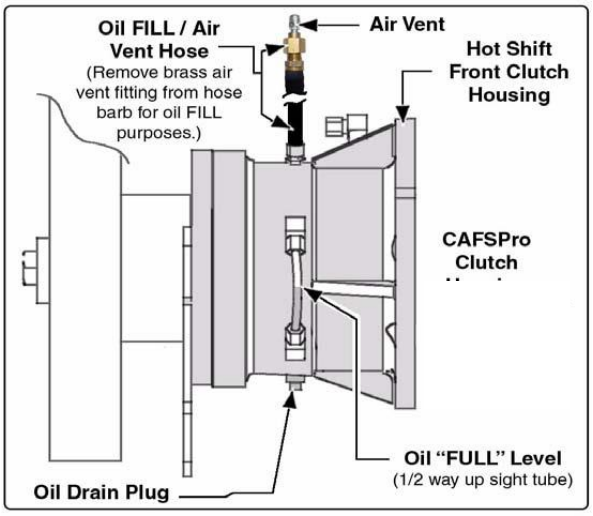

Figure 29 Clutch Component Callout

CLUTCH FLUID FILLING & CHECKING

1. Remove the plug next to the vent tube in the clutch housing.
2. Remove the vent cap located at the top of the rubber vent tube.
3. Fill the housing through the top of the vent hose until the fluid is at the ½ way point in the fluid level indicator tube on the side of the housing.

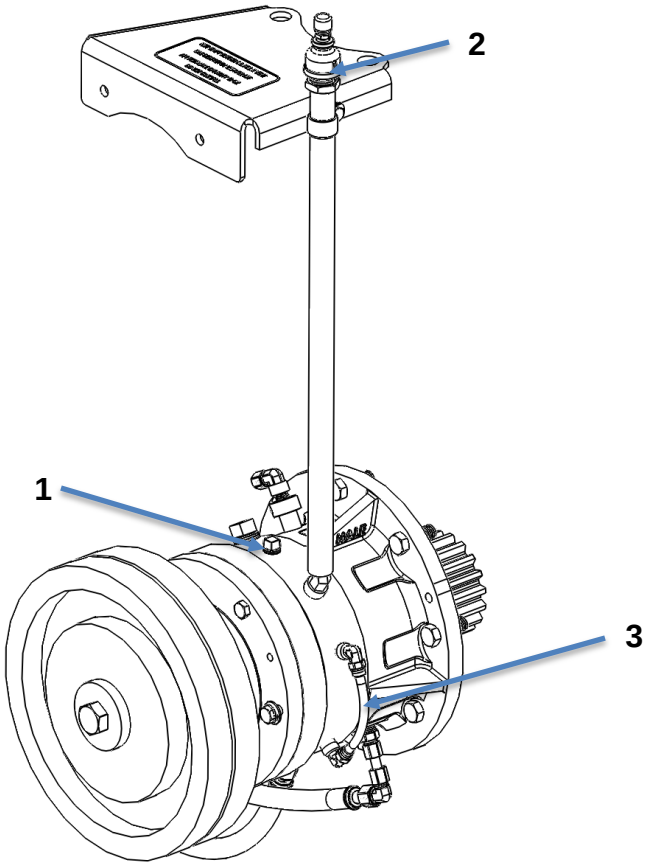

Figure 30 Clutch Fill Point

©HALE PRODUCTS, INC. Our policy is one of continuous development. We therefore reserve the right to amend specifications without notice or obligation.

Schematics

PLUMBING CONNECTIONS – DSD

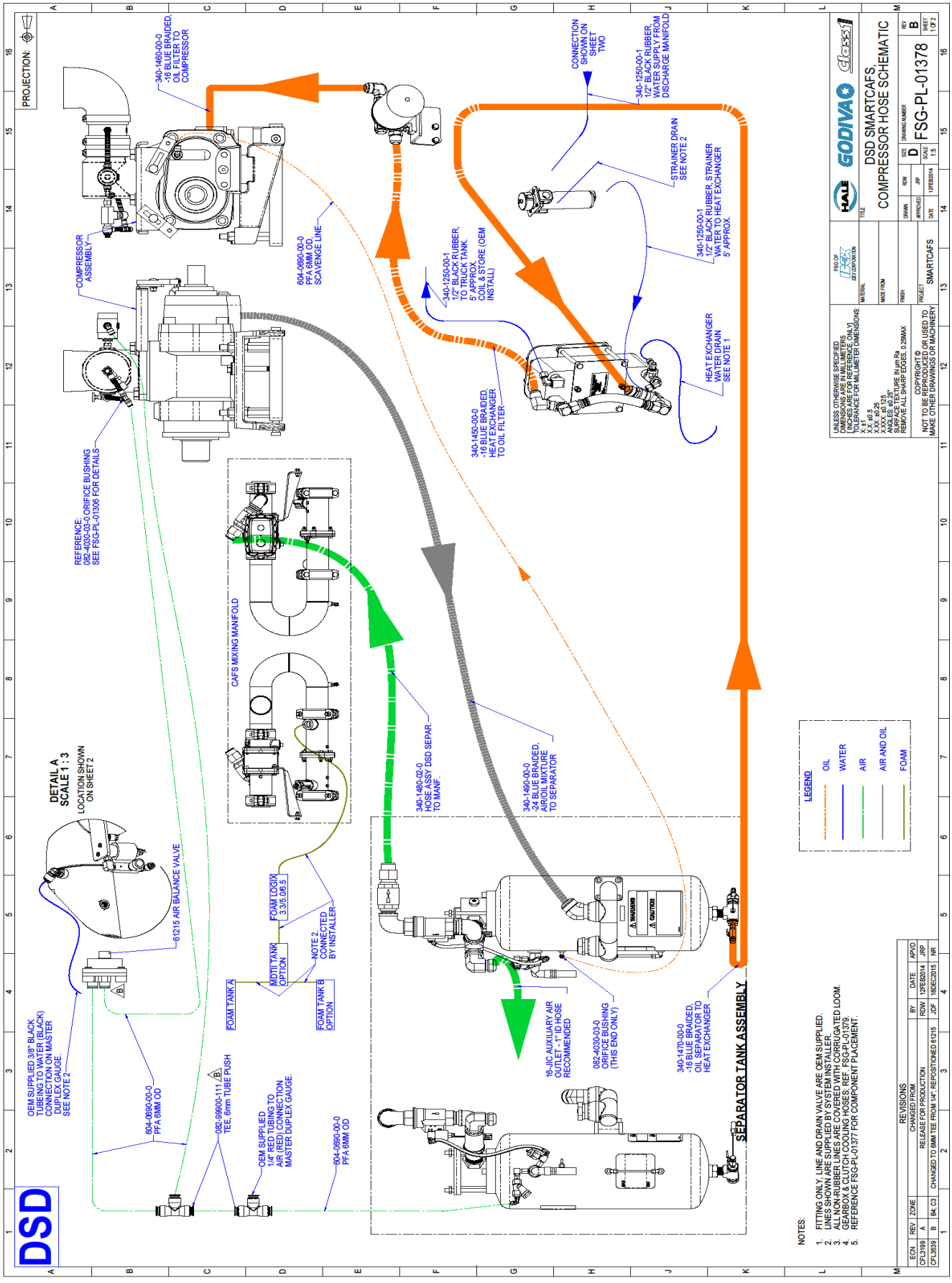

©HALE PRODUCTS, INC. Our policy is one of continuous development. We therefore reserve the right to amend specifications without notice or obligation.

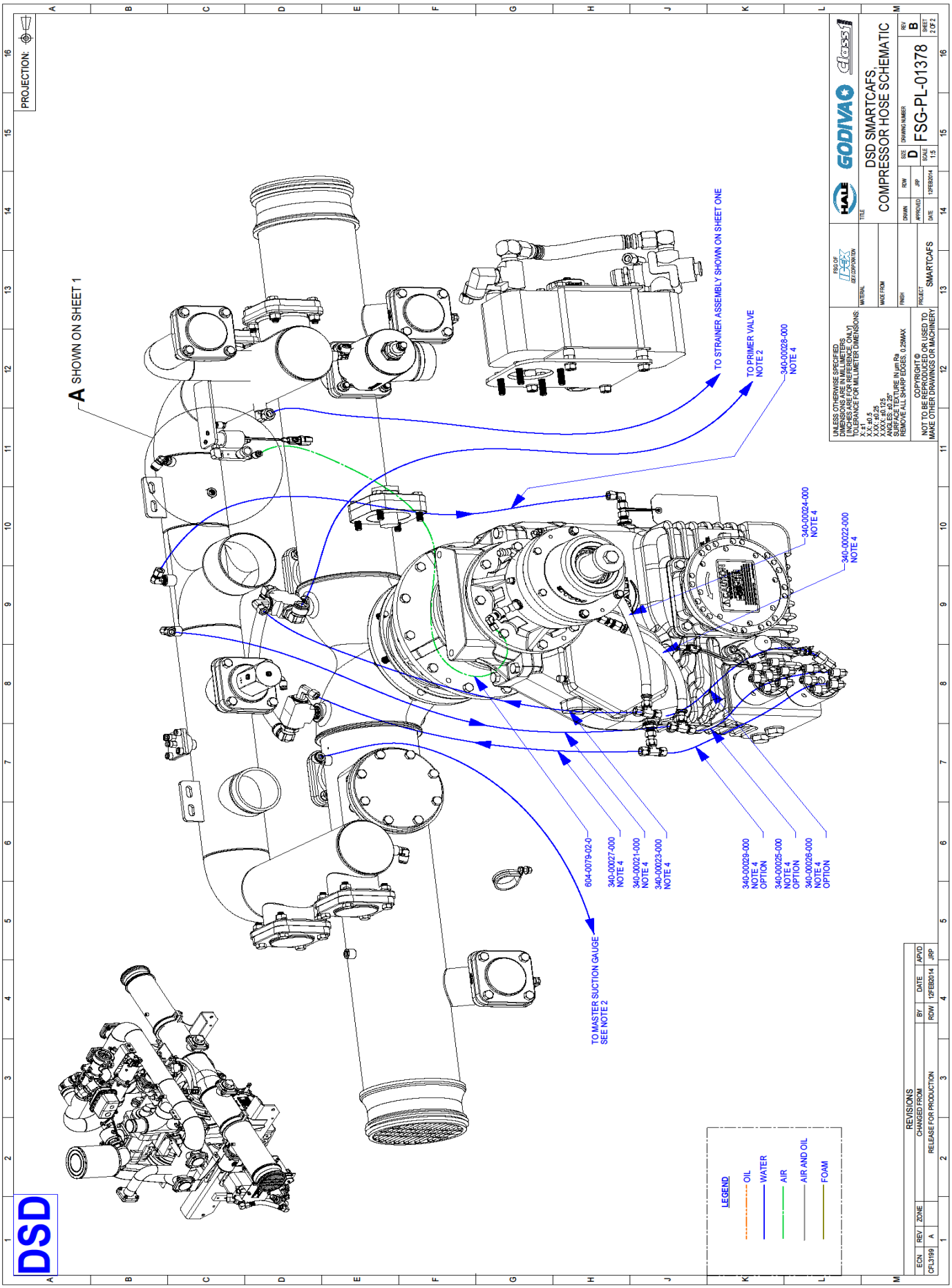

©HALE PRODUCTS, INC. Our policy is one of continuous development. We therefore reserve the right to amend specifications without notice or obligation.

PLUMBING CONNECTIONS – Q-SERIES

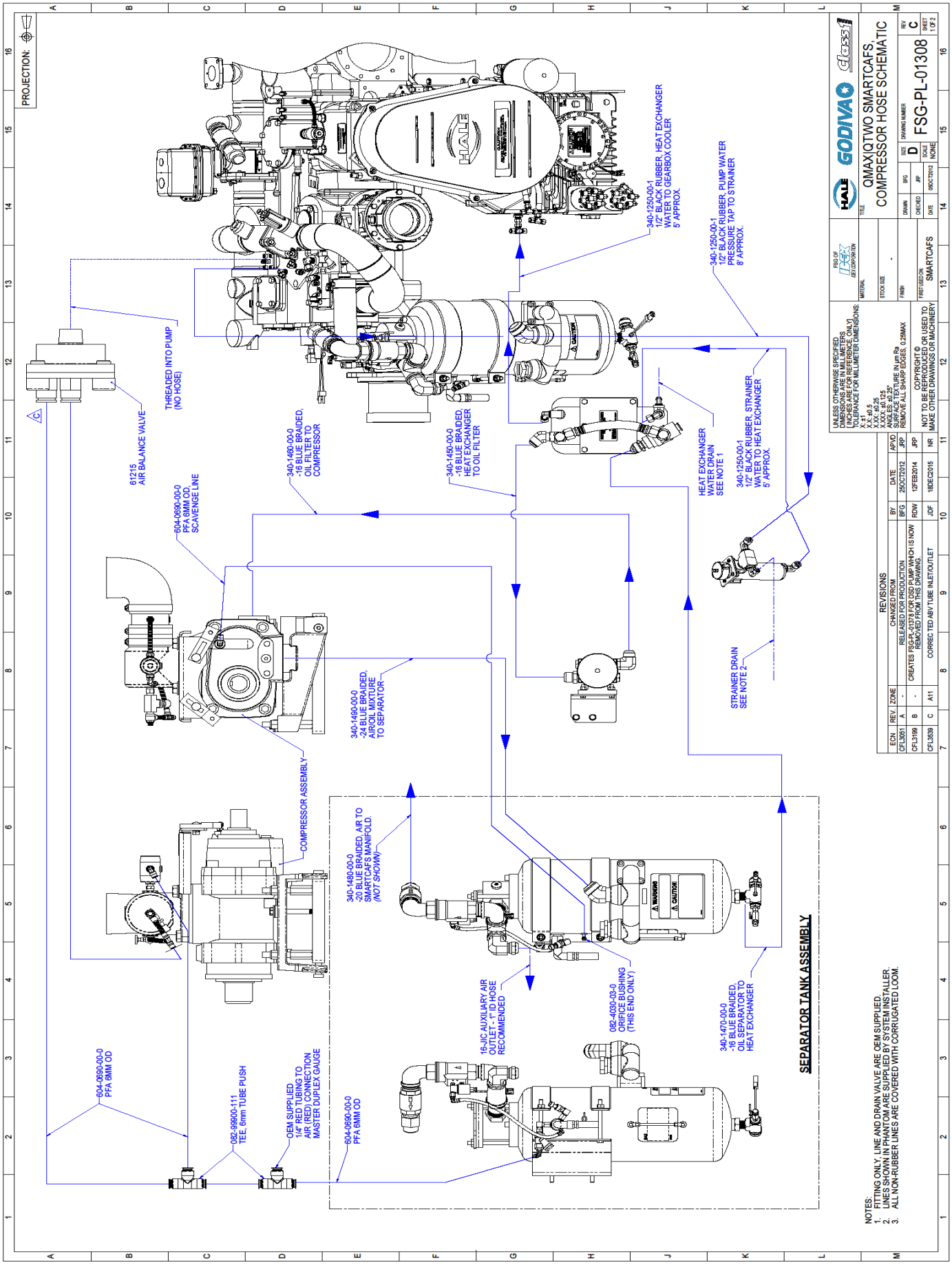

©HALE PRODUCTS, INC. Our policy is one of continuous development. We therefore reserve the right to amend specifications without notice or obligation.

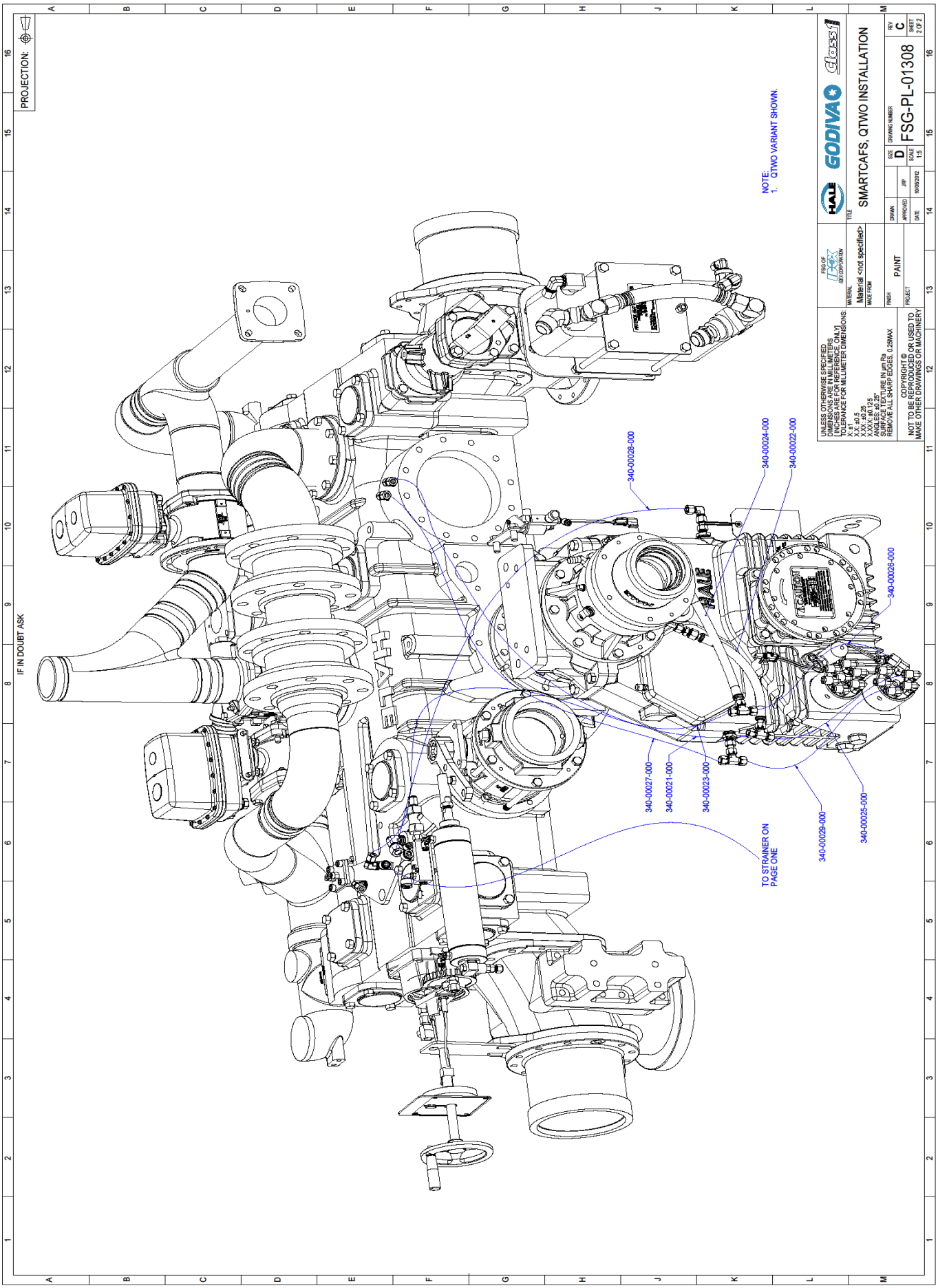

©HALE PRODUCTS, INC. Our policy is one of continuous development. We therefore reserve the right to amend specifications without notice or obligation.

SMARTCAFS200 INTERCONNECTION DIAGRAM – DSD

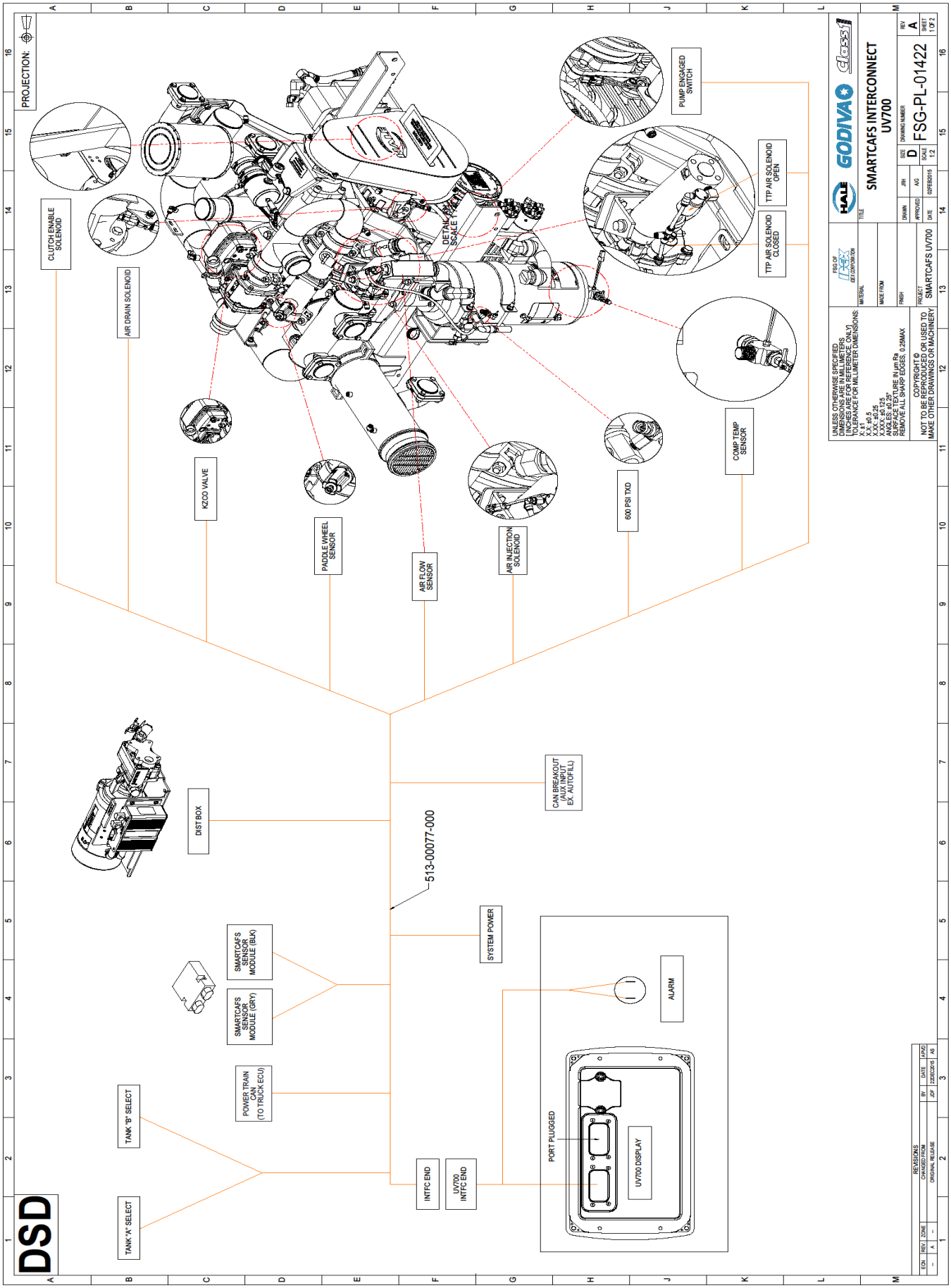

©HALE PRODUCTS, INC. Our policy is one of continuous development. We therefore reserve the right to amend specifications without notice or obligation.

SMARTCAFS200 INTERCONNECTION DIAGRAM – Q-SERIES

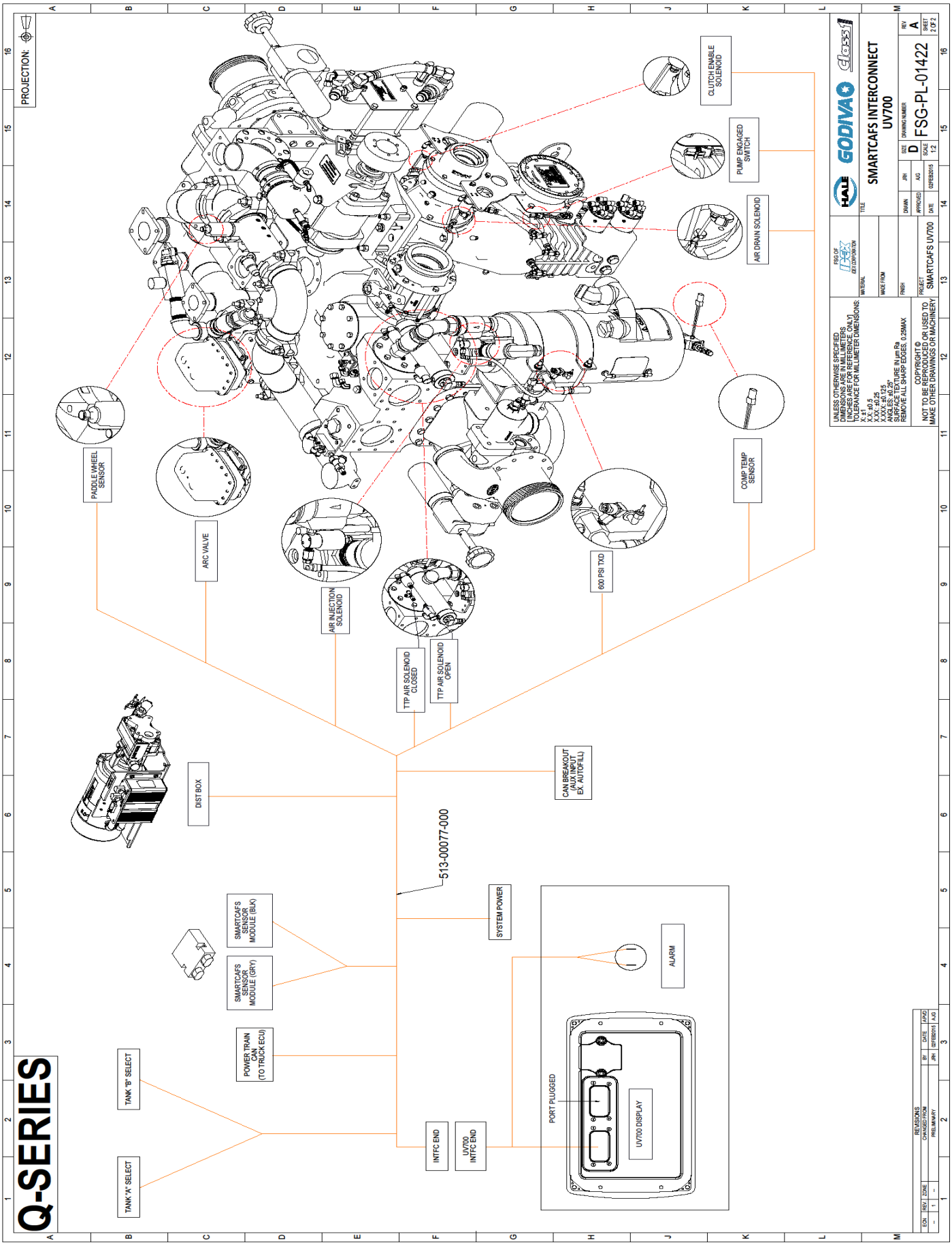

©HALE PRODUCTS, INC. Our policy is one of continuous development. We therefore reserve the right to amend specifications without notice or obligation.

FOAM TANK LOW LEVEL SENSOR

The unit is supplied with a connector for a low foam level sensor. The sensor is supplied with the unit ready for installation (instructions supplied with the sensor (Hale P/N: 200-2110-02-0).
The low foam level sensor is part of the Safety Interlock system and must be installed.

Note: The low foam level sensor must be installed in the tank in the correct orientation. The sensor has an arrow indicating the required orientation and must point upward.
The foam tank requires a ½" NPT tapped hole for secure mounting of the sensor. The maximum allowable thickness of the tank wall material is 3/4 in [19mm].
The center of the level switch should be located a minimum of 1-1/2 in [40mm] above the foam concentrate outflow to the foam pump.

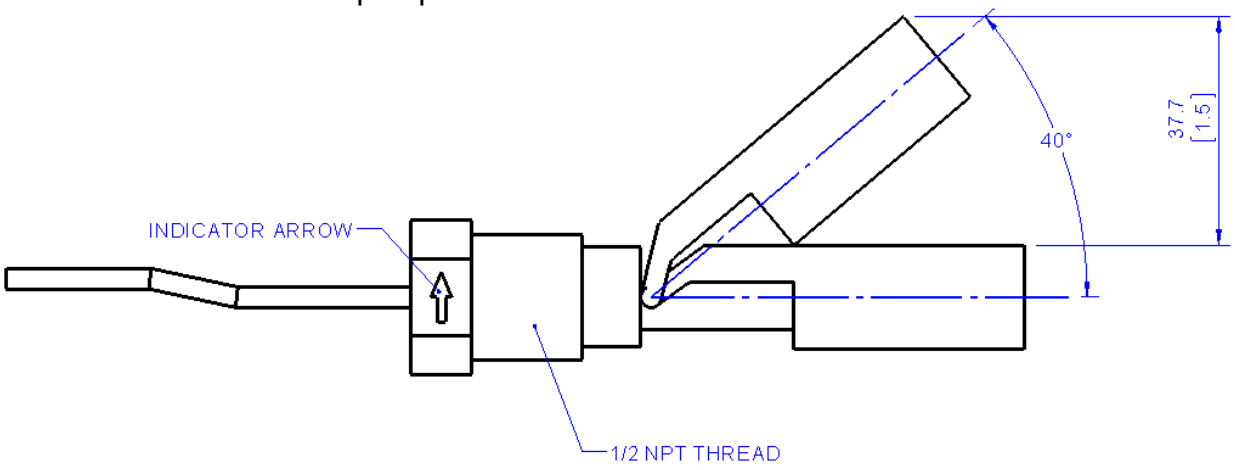

Additional Installation Points

FOAM TANK TO FOAM PUMP

The foam feed line must not at any point be lower that the foam pump and be fitted with a valve for maintenance purposes. The isolating tap should be located as close to the tank as possible. A flushing point should be fitted close to the isolating tap to ensure that the maximum length of hose line can be flushed out. The flushing line should also be fitted with an isolating valve.

Foam supply line I.D.	Class A	3/4 in [19mm] minimum
	Class B	1 in [25.4mm] minimum

The foam tank must be located to provide positive head pressure of foam concentrate to the Foam unit, and the supply hose should be arranged to fall gradually from the tank to the foam pump inlet to avoid air pockets. A tank drain valve must also be installed.

The foam tank should be made of plastic or stainless steel, compatible with foam chemicals, with a volume of 6.6 gallons [25 litres] or greater to allow an entire drum of foam agent to be contained. Refer to **Foam unit Model 3.3/5.0/6.5** Manual.

Note: *To ensure correct operation of the Foam unit pump, all connections must be secure and pressure tight.*

©HALE PRODUCTS, INC. Our policy is one of continuous development. We therefore reserve the right to amend specifications without notice or obligation.

VEHICLE DESIGN CONSIDERATIONS

The following information is included to assist the vehicle builder to achieve a successful installation.

The in-line foam strainer / valve assembly is a low-pressure device, rated at 43PSI [.296 MPa] and will NOT withstand high flushing water pressure.

Seal all electrical power and ground connections with silicone sealant to prevent corrosion.

The system will not operate correctly with poor electrical connections. Verify all electrical connections prior to start up.

Each Hale Foam unit system is tested at the factory using the wiring harness provided. Improper handling and abuse of connections will cause harm and may result in other system damage.

Use fittings which are compatible with those foam concentrates used. Brass or 300 series stainless steel is suitable.

The areas containing the DSD SmartCAFS components must be adequately shielded from the ingress of road spray / debris, chassis and vehicle power train lubricant. Exposure to dirt and grease will have a detrimental effect on the working life of the drive belt and electronics.

Full access to the compressor and gearbox oil fill points and level checkpoints must be considered as well as access for general unit maintenance. The use of removable side panels is advisable.

The compressor oil cooler water return line should have a check valve installed at the point of entry into the truck tank. **PLUMBING CONNECTIONS –** on Page 37. Hale part number 038-1550-00-0 is recommended for proper operation. Installer is responsible for final connections to the truck tank.

To prevent compressed air from being trapped in the pipe work, sealed blank caps **MUST NOT** be used on CAFS discharges.

©HALE PRODUCTS, INC. Our policy is one of continuous development. We therefore reserve the right to amend specifications without notice or obligation.

COMMISSIONING / START-UP PROCEDURE

1. Check that all the necessary connections have been correctly made.

2. Ensure that the Compressed Air / Oil Separator Tank and pump gearbox are filled with the correct oil type and quantity.

3. Prime and Run the water pump at 125 PSI [0.86 MPa] with compressor engaged.

4. Run the compressor for 30 seconds to allow oil to circulate.

5. Stop unit and check compressor oil level – top up if necessary.

6. Turn the bypass valve on the Foam unit pump to “bypass” and provide a suitable receptacle to collect the foam agent.

7. Ensure that there is sufficient foam agent in the tank(s). For **Foam unit 3.3/5.0/6.5** select tank **A**

8. Select simulated flow on the UV display by pressing the Menu button then pressing the “Simulated Water” button on the screen or button. Then return to the operating screen by selecting the “Return to Operation” button.

9. Press the button on the control head, and the Foam unit pump will prime itself. The pump will run for 30 seconds or until prime is achieved. If no prime is made, the display will show a plain test warning. Repeat this step once more to attempt to prime the pump.
If priming is not achieved after several attempts, Insure the foam supply is connected and available to the pump.

10. **For 3.3/5.0/6.5 Foam unit**, flush then select tank **B**, and repeat the priming procedure for that tank.

11. When prime is achieved, deselect simulated flow by return to the menu and turning off simulated flow.

12. Return the bypass valve to the inject position.

The unit is now ready to run.

©HALE PRODUCTS, INC. Our policy is one of continuous development. We therefore reserve the right to amend specifications without notice or obligation.

OPTIONAL TANK SELECTION FOR FOAM UNIT 3.3/5.0/6.5

For specific detail please refer to the **Foam unit Model 3.3/5.0/6.5** Manual: Installation and Operation manual. For further information on the MDTII Manual Tank Selector, please see the separate manual supplied, part number 029-0020-40-0.

DUAL TANK SELECTOR (OPTIONAL)

Tank A
For Class A foam concentrate

Tank B
For Class B foam concentrate

FLUSH
Supplies clean water to flush out foam concentrate from the foam strainer and foam pump

Connection Harness

©HALE PRODUCTS, INC. Our policy is one of continuous development. We therefore reserve the right to amend specifications without notice or obligation.

GENERAL OPERATION

WARNING

NEVER USE CAFS WITH A PRESSURE FEED INTO THE EYE OF THE PUMP.
SMARTCAFS PUMPS SHOULD ONLY BE USED WHEN WORKING FROM OPEN WATER OR A TANK FEED.
PROBLEMS WILL OCCUR WITH THE WATER / AIR PRESSURE RATIO, SHOULD PRESSURISED (HYDRANT) WATER SUPPLY BE APPLIED DIRECTLY TO THE SUCTION TUBE.
HYDRANT SUPPLY MAY ONLY BE USED TO MAINTAIN THE WATER LEVEL IN THE VEHICLE TANK.

PRESET SCREEN (START SCREEN)

The SmartCAFS Controller shows the start screen after a power cycle. This screen allows the operator to select one of 10 preset operating modes (configurable) or manual operating mode.

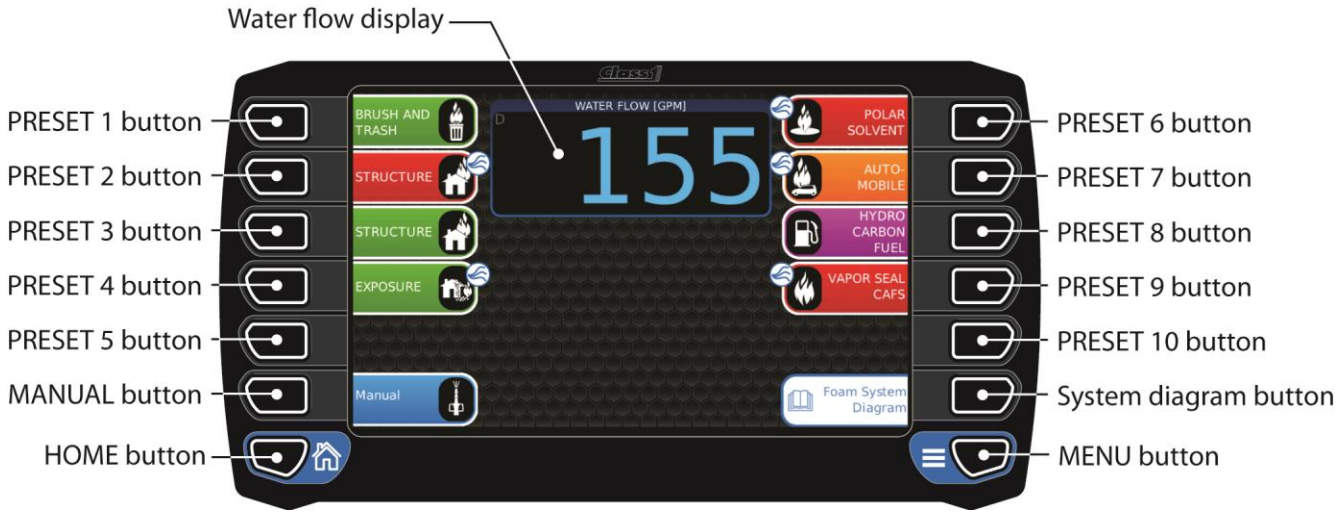

(a) Preset buttons

There are 10 configurable preset buttons. The text, icon, bar color, and CAFS indicator are configurable by the user through a password protected configuration screen. The preset configuration screen allows the user to select the operating foam tank (A/B), foam percentage, CAFS mode, and ARC valve position.
The operating screen is entered when a preset button is pressed and held for 0.5 seconds. The operating mode of the foam and CAFS will be set to the configured preset settings.

(b) Water flow display

The water flow display is always visible and shows the current water flow rate through the Foam/CAFS discharge manifold.

©HALE PRODUCTS, INC. Our policy is one of continuous development. We therefore reserve the right to amend specifications without notice or obligation.

(c) Home button

This button toggles the display between the Preset Screen and the Operating Screen.

(d) Menu button

This button shows/hides the additional information displays. When this button is pressed and held for 3 seconds the menu will be displayed.

OPERATING SCREEN

The operating screen allows control over the foam, CAFS, and tank valve. The water flow display is always active, but the air flow display is only shown when the CAFS power is ON.

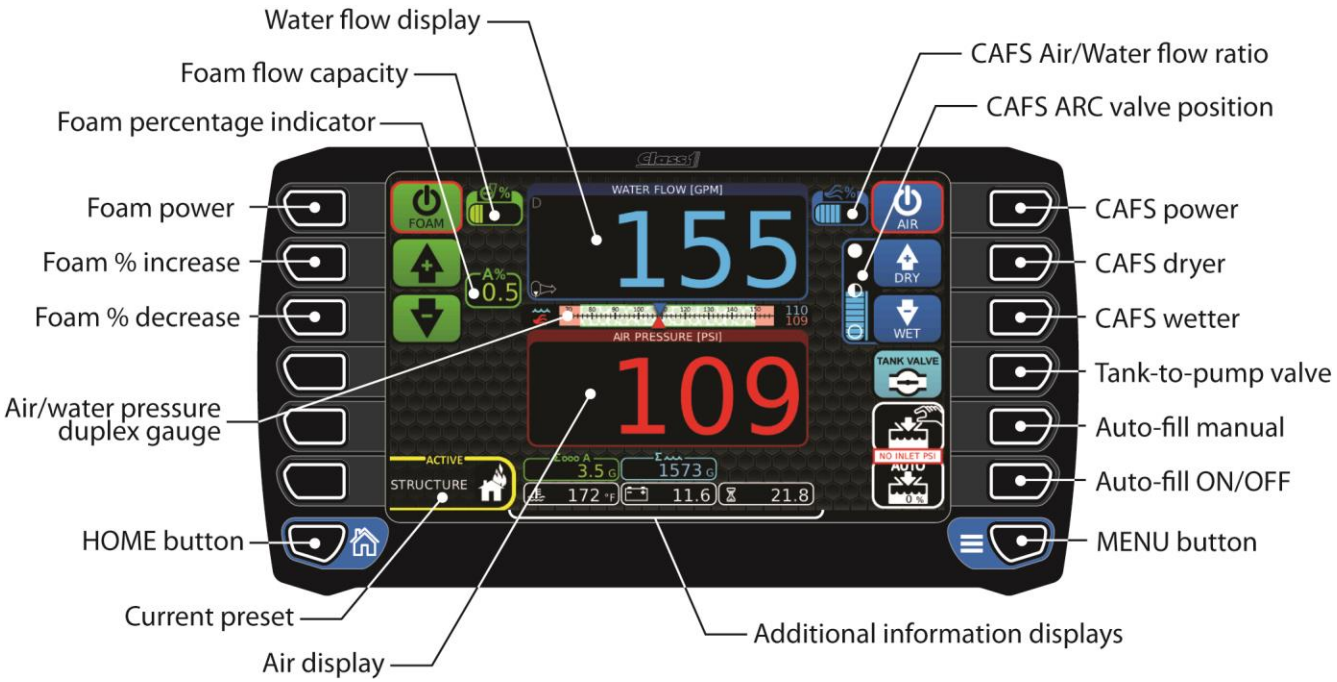

(e) Water flow display

The water flow display is always visible and shows the current water flow rate through the Foam/CAFS discharge manifold.

(f) Foam flow capacity

The foam flow capacity is a bar graph that shows how hard the foam pump is working (0% to 100%).

(g) Foam percentage indicator

The foam percentage indicator shows the foam proportioning rate for the currently selected tank.

©HALE PRODUCTS, INC. Our policy is one of continuous development. We therefore reserve the right to amend specifications without notice or obligation.

(h) Foam power button

The foam power button turns the foam system OFF or ON. The foam power button's color indicates the currently selected foam tank (A green, B red, FLUSH orange). The border of the power button is black when OFF and red when ON.

Foam system OFF

Foam system ON

(i) Foam increase and decrease buttons

The increase and decrease foam buttons change the foam percentage for the currently selected foam tank. The color of these buttons indicates the tank selected and foam system power state:

green = foam system ON, tank A selected
red = foam system ON, tank B selected
gray = foam system OFF

These buttons will modify the foam percentage value even when the foam power button is OFF.

(j) Air/water pressure duplex gauge

The duplex gauge shows the air and water pressures. The background shows the proper CAFS operating range in green (75 PSI to 150 PSI). This gauge is only shown when the additional information is being shown (see section (v)).

(k) Home button

Return to the preset screen.

(l) Current preset

This display shows the currently selected preset name and icon (or "manual" if manual was selected).

(m) Air display

This display shows the current air pressure, CAFS ratio, or current air flow rate based on the "CAFS air display" selection configured in the "user menu" (see section 0). The air flow rate and CAFS ratio displays are only shown when CAFS is turned ON.

(n) CAFS air/water flow ratio

The CAFS air/water flow ratio is a bar graph that shows the relationship between the air flow and water flow rates (0% to 100%). This display is only available when equipped with the Hale air flow sensing valve.

©HALE PRODUCTS, INC. Our policy is one of continuous development. We therefore reserve the right to amend specifications without notice or obligation.

(o) CAFS ARC valve position

The ARC valve position indicator is a bar graph that shows the gating of the valve (0% [full wet] to 100% [full dry)]. The border color indicates the state of air injection – red = not injecting air, blue = injecting air.

(p) CAFS power button

The CAFS power button activates the CAF System (it will start the foam system if it is not already active). CAFS will be turned OFF when the foam power button is turned OFF. The CAF System will also evaluate the air pressure, compressor temperature, water flow, and foam flow before activating the air injection. The border of the power button is black when OFF and red when ON. The power button's color is gray when the clutch has been disengaged.

CAFS OFF, clutch disengaged

CAFS OFF, clutch engaged

CAFS ON

(q) CAFS Wet and Dry buttons

The wet and dry buttons open/close the ARC valve. These buttons are only active when CAFS power is active. These buttons are active when they are blue and inactive when they are gray.

(r) Tank-to-pump valve button

The tank valve button opens or closes the tank valve. The icon on the button indicates the current position of the valve (open or closed). The tank-to-pump valve can be configured (in the user menu) to open automatically when the pump engaged signal is detected. Even when set to automatic mode this button can be utilized to manually open/close the tank-to-pump valve.

(s) Auto-fill manual button

(When an auto-fill system is installed) The auto-fill manual button opens the KZCO valve connected to the inlet in order to fill the water tank. This button is a momentary button and the valve will only be open as long as the button is held. The on-screen icon changes to green to indicate that the valve is being forced open.

(t) Auto-fill ON/OFF button

(When an auto-fill system is installed) The auto-fill ON/OFF button turns ON or OFF the automatic water refill system. The on-screen icon shows the status of auto-fill: white = auto-fill ON, white with RED / = auto-fill is OFF.

The auto-fill system will only operate if there is sufficient inlet pressure (7+ PSI). If there is not enough inlet pressure the "NO INLET PSI" warning will be shown between the buttons.

©HALE PRODUCTS, INC. Our policy is one of continuous development. We therefore reserve the right to amend specifications without notice or obligation.

(u) Menu button

Toggle button shows/hides the additional information displays. When this button is pressed and held for 3 seconds it shows the password enter screen.

(v) Additional information display

The additional information displays show the total water flowed, total foam flowed, battery voltage, pump engaged operating hours, and compressor oil temperature. This display is toggle ON/OFF with the menu button.

NOTE: *Total water flowed and total foam flowed are erased when the system is repowered. These values may also be zeroed during operation when desired in the system menu.*

©HALE PRODUCTS, INC. Our policy is one of continuous development. We therefore reserve the right to amend specifications without notice or obligation.

FOAM/CAFS OPERATION

ENGAGE THE PUMP

WARNING

DO NOT APPLY HYDRANT PRESSURE TO PUMP SUCTION WHEN OPERATING CAFS. MAY BE OPERATED FROM OPEN WATER OR TANK FEED ONLY

NOTE: *The automatic tank-to-pump open function is a menu selectable item and must be set for "automatic: for this operation to occur (this is the default). The SmartCAFS Controller will automatically open the tank-to-pump valve (see note) when the pump engaged signal is recognized.*

NOTE: *The SmartCAFS Controller will automatically engage the compressor clutch when the pump engaged signal is recognized OR when a CAFS preset button is first pressed. This operation is a menu selectable item. If pump input speed is >900rpm the compressor will not engage and a plain text error message will appear. Reduce speed below 900 RPM then the CAFS compressor can be engaged.*

NOTE: *When discharging dry foam at low pump pressure, the possibility of hose kinking is increased and should be considered when deploying hoses.*

START FOAM/CAFS OPERATION BY SELECTING A PRESET (OR MANUAL)

Press and hold the desired preset button for 0.5 seconds. The display will show an information bar to indicate to keep holding the button for the required time.

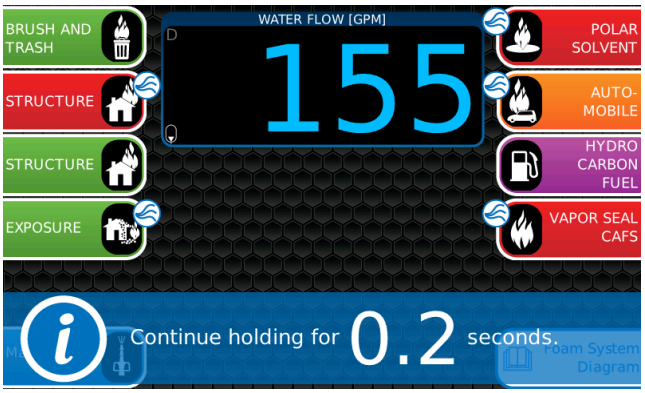

The display will then show the operation screen. The SmartCAFS Controller is now ready to manage the foam/CAF System as the preset dictates when water flow is detected. Water flow is the driving factor for system operation in both "foam only" or "foam and air" (CAFS).

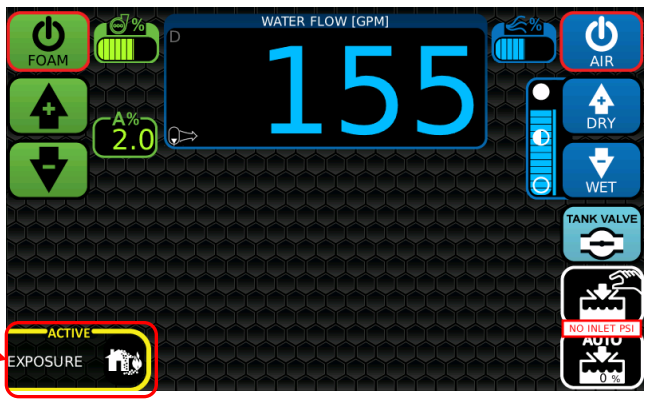

©HALE PRODUCTS, INC. Our policy is one of continuous development. We therefore reserve the right to amend specifications without notice or obligation.

The bottom left corner of the screen shows the currently active preset.

INCREASE ENGINE SPEED FOR DESIRED WATER PRESSURE

(With Sentry pressure governor) – The SmartCAFS Controller automatically communicates with the Sentry governor to set the governing system to RPM mode and ramp to its preset 1 engine speed.

(Without Sentry pressure governor) – Manually adjust the engine speed to set the water/air pressure to the desired value (CAFS operating range = 75 psi to 150 psi). When using a governor other than the Sentry make sure the governing mode is set to RPM.

SELECTING A NEW PRESET

If a new preset is desired, press the HOME button to move back to the preset screen.

NOTE: *The system continues to operate using the current foam/CAFS setting when going back to the preset screen.*

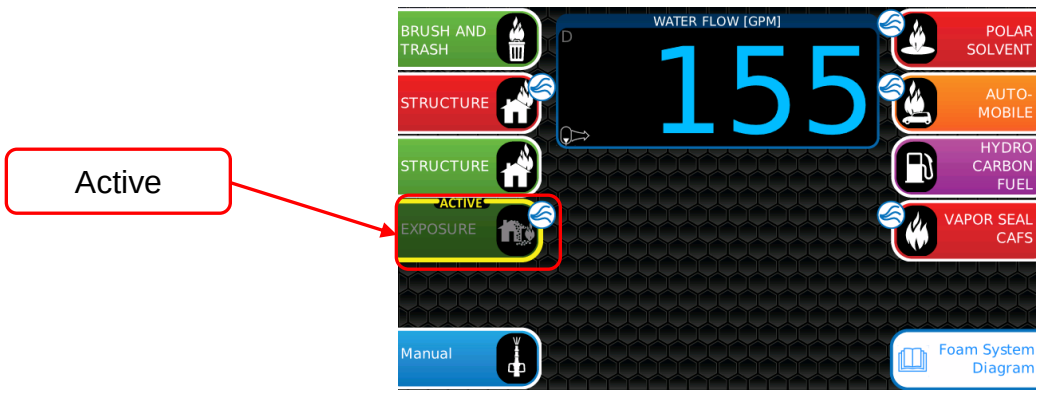

The currently active preset will be indicated by the flashing “ACTIVE” border. Press a new preset button (or manual). Simply press the HOME button again if a new preset is not desired. The operation screen will again be shown.

MODIFY THE CURRENT OPERATING PARAMETERS

At any time the operating parameters can be modified by pressing the foam percentage (increase/decrease) buttons or by pressing the CAFS wet/dry buttons.

©HALE PRODUCTS, INC. Our policy is one of continuous development. We therefore reserve the right to amend specifications without notice or obligation.

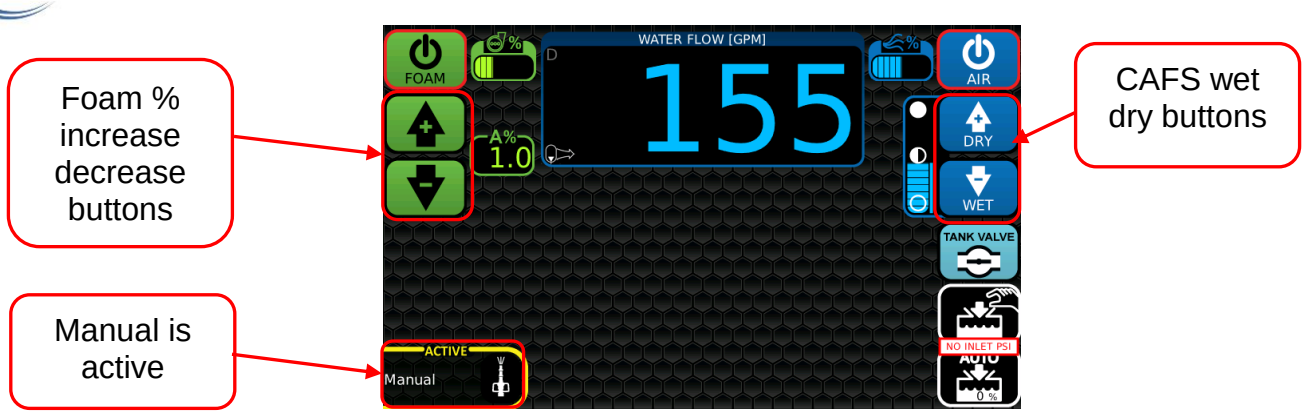

The bottom left corner of the screen will now show “manual” because the settings have been changed from the original preset values.

The foam and/or CAFS power buttons can be pressed to enable/disable the foam/CAF Systems.

- When foam and CAFS are ON, pressing the foam power button will turn OFF foam and CAFS.
- When foam and CAFS are ON, pressing the CAFS power button turns OFF only CAFS.
- When foam and CAFS are OFF, pressing the foam power button will turn ON only foam.
- When foam and CAFS are OFF, pressing the CAFS power button turns ON foam and CAFS.

DISENGAGING THE COMPRESSOR CLUTCH

1. The compressor clutch will be automatically disengaged when the pump engaged signal is turned OFF. At this time the SmartCAFS Controller will turn OFF foam and CAFS and return to the preset screen.

2. The compressor clutch can be manually disengaged by pressing and holding the CAFS power button for three seconds (the warning banner will pop-up to indicate how long the CAFS power button must be held).

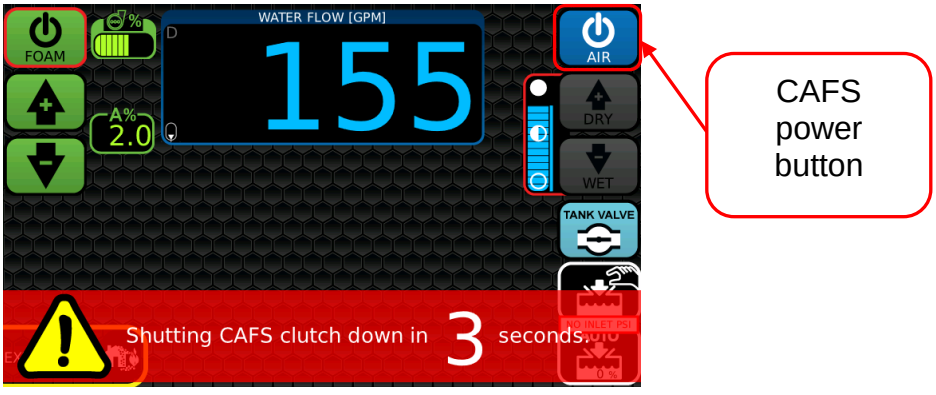

The on-screen CAFS buttons will be gray to indicate that the compressor clutch is disengaged.

©HALE PRODUCTS, INC. Our policy is one of continuous development. We therefore reserve the right to amend specifications without notice or obligation.

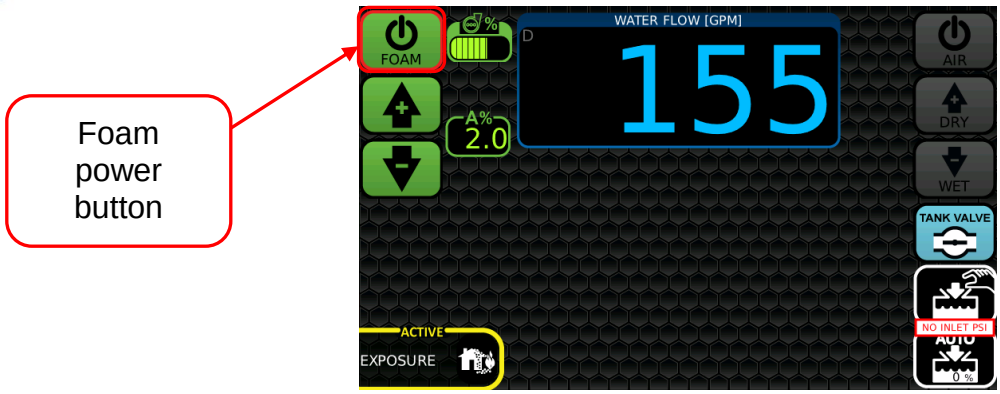

NOTE: *It will be necessary to turn OFF the foam system if foam operation is no longer desired.*

3. Run water through the CAFS discharge system to flush out the foam agent.

4. Close the CAFS discharge valves.

5. Shift the truck transmission from DRIVE to NEUTRAL and shift the water pump VPS from PUMP to ROAD mode.

6. If freezing conditions are expected, drain the manifold, pump, water strainer and CAFS heat exchanger.

OVERHEAT SHUT DOWN

1. Should the compressor oil temperature reach 220°F [105°C], a control panel warning indicator will appear on the screen. The compressor can sustain 220°F [105° C] for short periods without damage.

2. If the compressor oil temperature reaches 230°F [110° C], the drive clutch will automatically disengage. This will stop the compressed air supply and only foam/water solution will be discharged. The compressor cannot be re-engaged until the unit has been cooled and the pump input speed is returned to below 900 RPM.

3. The most probable cause of compressor overheating is insufficient cooling water flow.

FLUSHING

When returning the apparatus to ready condition after using class B foam, the Hale Foam unit foam pump **must** be flushed. This is because some Class B foam concentrates deteriorate rapidly. It is recommended to flush for the preset time in the SmartCAFS.

NOTE: *Approved class A foam concentrates do not deteriorate at the rate of class B foam concentrates. Provided that an approved class A foam concentrate is used and the system is used within 30 days, flushing is not required. After class B foam concentrate has been used, flush the system then select class A.*

For detailed flushing instructions, please refer to the **Foam unit Model 3.3/5.0/6.5 Manual** 029-0021-68-0.

©HALE PRODUCTS, INC. Our policy is one of continuous development. We therefore reserve the right to amend specifications without notice or obligation.

WATER AUTO-FILL OPERATION

The water auto-fill system attempts to maintain the desired water tank level by gating the KZCO valve on the inlet side of the pump. The current position (0% to 100%) of the valve is shown on the on-screen auto-fill ON/OFF button. The auto-fill system gets the tank level information from the Class1 ITL water gauge.

The system is only active when the inlet pressure is 7 PSI or greater. If there is not enough inlet pressure the “NO INLET PSI” warning will be shown between the auto-fill control buttons.

START/STOP AUTO-FILL

Press the auto-fill ON/OFF button to change the system state.

Auto-fill system OFF

Auto-fill system ON

MANUALLY OPEN THE AUTO-FILL VALVE

Press the auto-fill manual button to force the valve open. Release the button to close the valve (if the auto-fill system is ON it will revert to the automatic control).

Manual fill OFF

Manual fill ON

SETTING THE DESIRED TANK LEVEL FOR AUTO-FILL

The USER menu contains the setting “Desired autofill water level” which can be set anywhere from “empty” to “full” in 1/8 tank increments (the default is 7/8).

©HALE PRODUCTS, INC. Our policy is one of continuous development. We therefore reserve the right to amend specifications without notice or obligation.

MENUS

SYSTEM MENU

Press and hold the MENU button for 3 seconds until the system menu is shown. The system menu allows the clearing (zero) of the total water and total foam display, setting the simulated water flow (for diagnostics), and entering passwords for other menus (user and OEM), for calibrations (water and foam), and for configuration (presets).

NOTE: *The password keyboard is greyed out if the foam and/or CAFS power buttons are ON.*

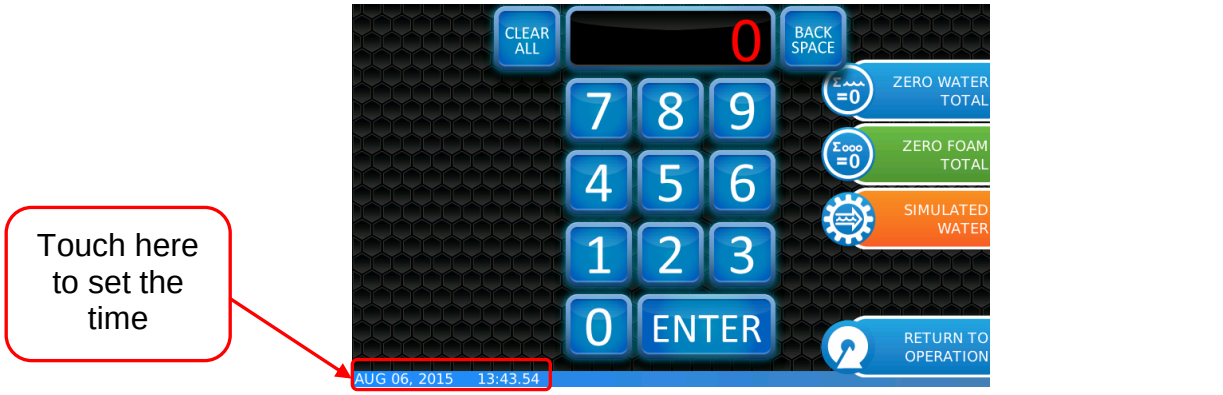

SETTING THE SYSTEM TIME

Press the blue bar in the bottom left corner of the system menu screen (over the month and day) and the “set the date and time” screen will appear. Enter the new date/time and press the “green check mark” to save.

NOTE: *The display will re-boot after pressing the “green check mark”.*

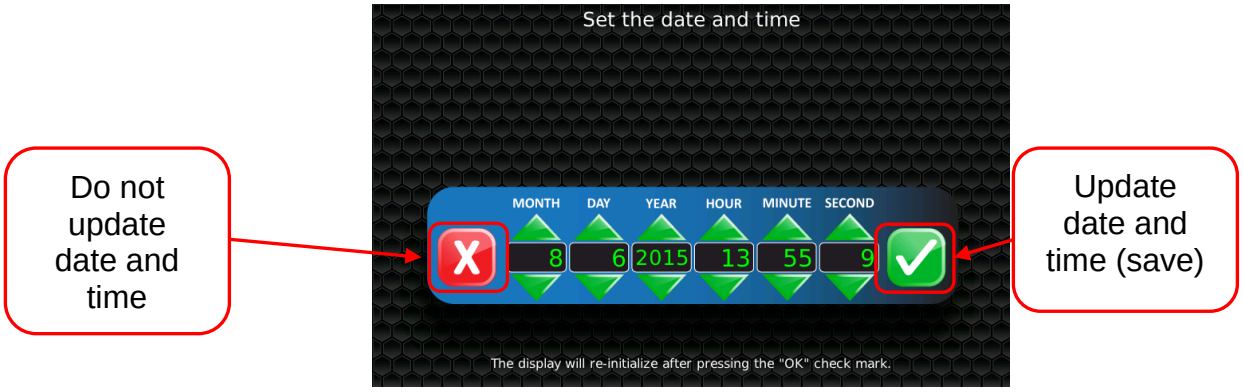

©HALE PRODUCTS, INC. Our policy is one of continuous development. We therefore reserve the right to amend specifications without notice or obligation.

USER MENU

Enter the password **1849** in the system menu's keyboard to open the user menu. The user menu allows setting of user configurable items.

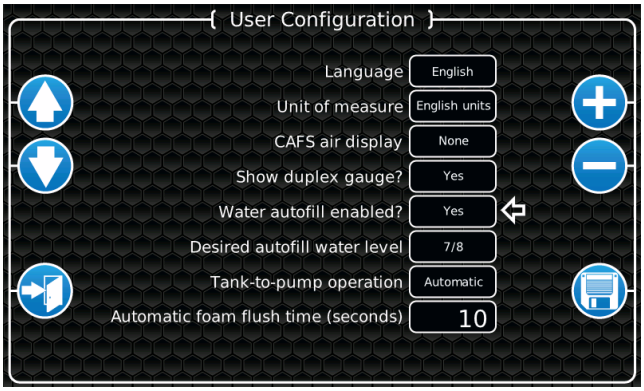

Language - select the desired language to show within the SmartCAFS Controller.
Default: English

Unit of measure - select the desired unit of measure for the system (English or metric).
Default: English units

CAFS air display - select the desired display to be shown for the air. This display is shown beneath the water flow display (none, SCFM, ratio, or air pressure). Note: SCFM will only be shown if a Hale air flow sensing valve is installed.
Default: None

Show duplex gauge? - select whether to show the duplex gauge when additional information is toggled.
Default: No

Water autofill enabled? - select whether to use auto-fill.
Default: No

Desired autofill water level - select the level to maintain in auto-fill (fill, 7/8, 3/4, 5/8, 1/2, 3/8, 1/4, 1/8, empty).
Default: 7/8

Tank-to-pump operation - select whether the tank-to-pump valve is operated manually or automatically (or none if an air actuated tank-to-pump valve is not installed).
Default: Automatic

Automatic foam flush time - number of seconds that the foam system must be flushed (2 to 60 seconds).
Default: 10 seconds

(w) UP/DOWN arrow buttons

Select the menu item. The white arrow points to the currently selected menu item.

©HALE PRODUCTS, INC. Our policy is one of continuous development. We therefore reserve the right to amend specifications without notice or obligation.

(x) "+" and "-" buttons

Change the value of the currently selected menu item.

(y) Exit button

Exit the menu.

(z) Save button

Save all items in the menu.

OEM MENU

Enter the password **2314** in the system menu's keyboard to open the user menu. The user menu allows setting of user configurable items.

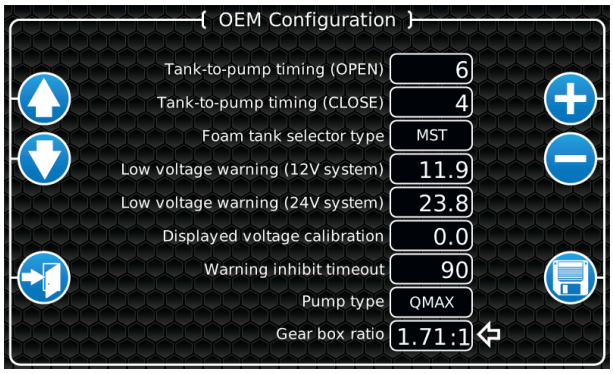

Page one

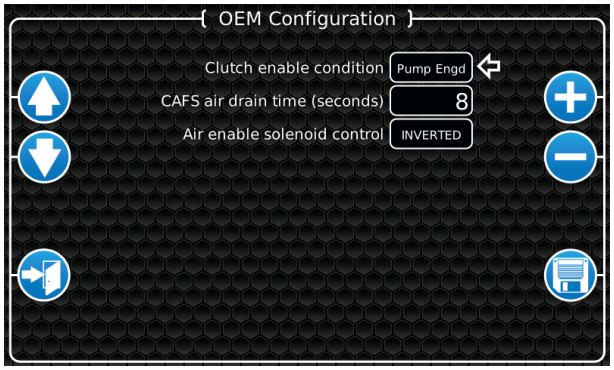

Page two

Tank-to-pump timing (open) - select the amount of time the "open" air solenoid is activated. The tank-to-pump valve is controlled via a linear air cylinder so this setting allows for fine tuning of the amount of time it actually takes to fully stroke the cylinder.

Default: 6 seconds

Tank-to-pump timing (close) - select the amount of time the "close" air solenoid is activated. The tank-to-pump valve is controlled via a linear air cylinder so this setting allows for fine tuning of the amount of time it actually takes to fully stroke the cylinder.

Default: 4 seconds

Foam tank selector type - select the foam tank selector type. Single tank systems (none or MST), dual tank systems (MDT or ADT).

Default: MST

Low voltage warning (12V) - select the low voltage warning level for 12V systems.

Default: 11.9 volts

Low voltage warning (24V) - select the low voltage warning level for 24V systems.

Default: 23.8 volts

©HALE PRODUCTS, INC. Our policy is one of continuous development. We therefore reserve the right to amend specifications without notice or obligation.

Displayed voltage calibration - if the displayed voltage in the additional information displays does not match the actual system voltage this value can be adjusted to calibrate (offset) the voltage (-1.5 to +1.5 volts).
Default: 0.0 volts

Warning inhibit timeout - sets the amount of time (30 to 300 seconds) that a warning, which was inhibited (cleared) by the operator, will stay hidden until it shown again (if the warning is still active).
Default: 90 seconds

Pump type - select the Hale pump type (QMAX-XS, QMAX, QTWO, or DSD).
Default: QMAX-XS

Gear box ratio - select the gear box ratio. This is used along with the pump type to set the compressor over-speed warning.
Default: 1.71:1

Clutch enable condition - select when the compressor clutch will be enabled (Pump Engd = clutch engaged when the pump engaged signal is activated, Preset = clutch engaged when a CAFS preset is first pressed).
Default: Pump Engd

CAFS air drain time - select how long the air drain solenoid is open when the pump engage signal is deactivated (0 to 10 seconds). This allows the residual air to be bled off after system usage.
Default: 8 seconds

Air enable solenoid control - sets how the air enable solenoid is controlled. Inverted = air IS NOT blown into the air valve assembly to activate air injection. Normal = air IS blown into the air valve assembly to activate air injection. ***Note: when using the Hale air sensing valve this value should be set to "inverted".***
Default: INVERTED

(aa) UP/DOWN arrow buttons

Select the menu item. The white arrow points to the currently selected menu item.

(bb) "+" and "-" buttons

Change the value of the currently selected menu item.

(cc) Exit button

Exit the menu.

(dd) Save button

Save all items in the menu.

©HALE PRODUCTS, INC. Our policy is one of continuous development. We therefore reserve the right to amend specifications without notice or obligation.

CALIBRATIONS

Enter the password **6679** in the system menu's keyboard to open the calibration menu. The calibration menu allows the foam and water calibrations to be performed.

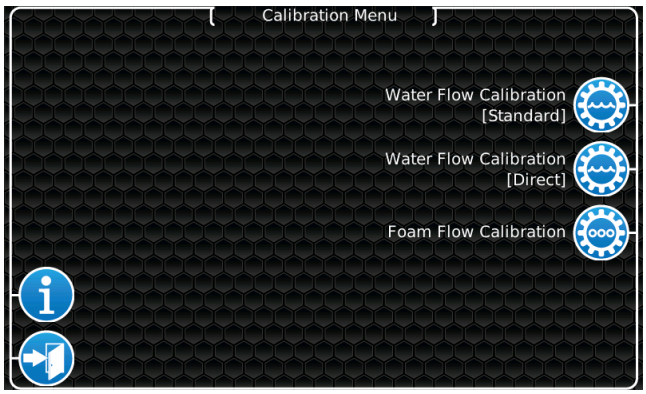

NOTE: *Anytime the* *button is shown it can be pressed to pop-up a tutorial about the current screen. The tutorial can be canceled at any time by pressing the* *button again.*

WATER FLOW CALIBRATION (STANDARD)

The standard water flow calibration requires plain water to be flowed through a foam/CAFS capable discharge. The water flow calibration requires flows at a high rate and a low rate. The high and low rate is determined by the person calibrating the system. This two-point calibration yields a very precise water flow calibration across the entire range.

NOTE: *An accurate flow measuring device must be used to measure the water flow when calibrating the flow sensor. Use a suitable size, smooth bore nozzle and an accurate Pitot Gauge instrument.*

1. Establish flow through a foam/CAFS capable discharge at either the high or low rate. Use the yellow "raw pulses" display window to verify that the paddlewheel sensor is detecting the water flow.

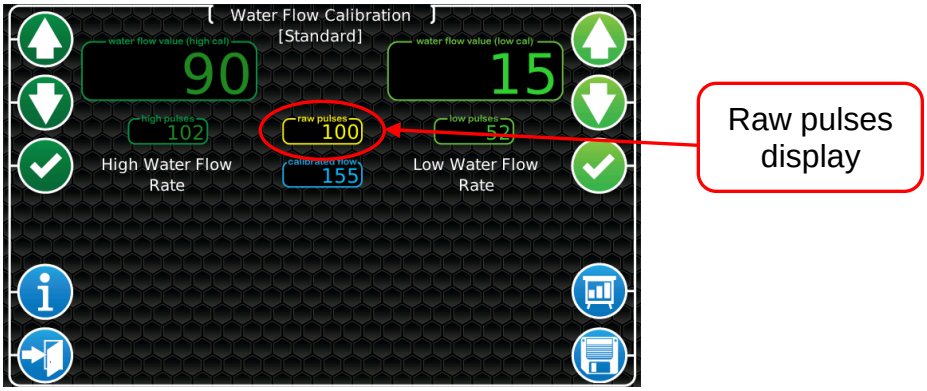

©HALE PRODUCTS, INC. Our policy is one of continuous development. We therefore reserve the right to amend specifications without notice or obligation.

2. Press the “chart icon” button to open the flow rate calculator.

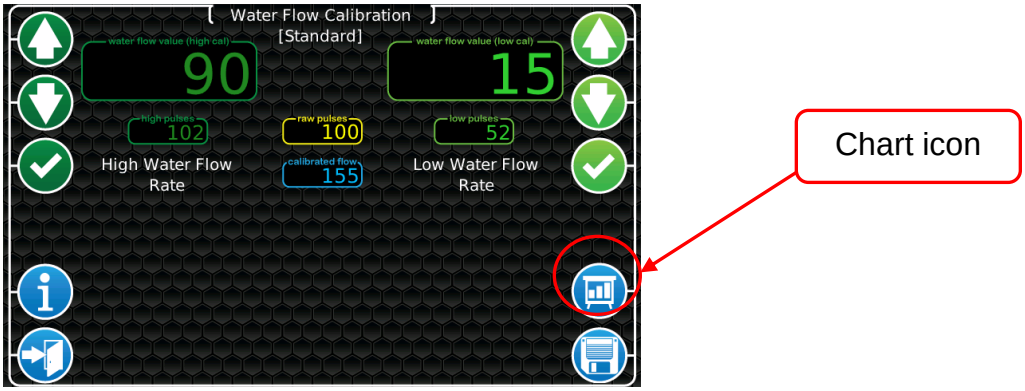

3. This calculator will allow the entry of the smooth bore nozzle size and the current pitot gauge reading in order to calculate the flow rate. Press the “return arrow icon” button to return to the water flow calibration screen.

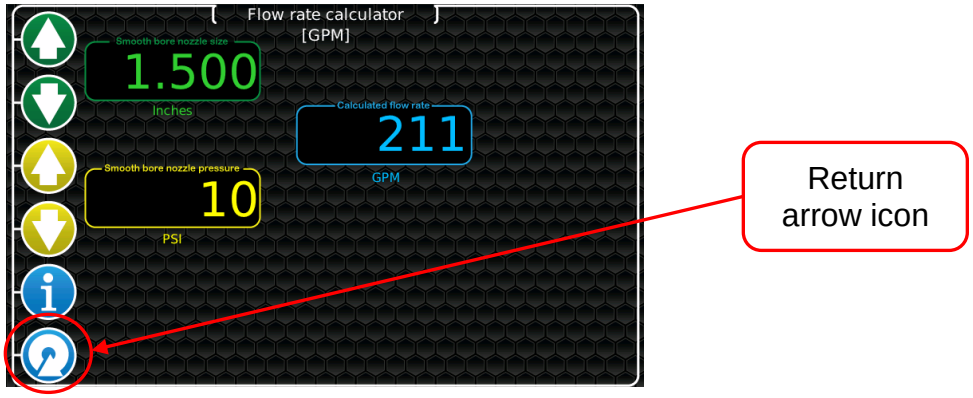

4. The display will ask where you want to place the calculated value. Press the display where you want the value to be placed.

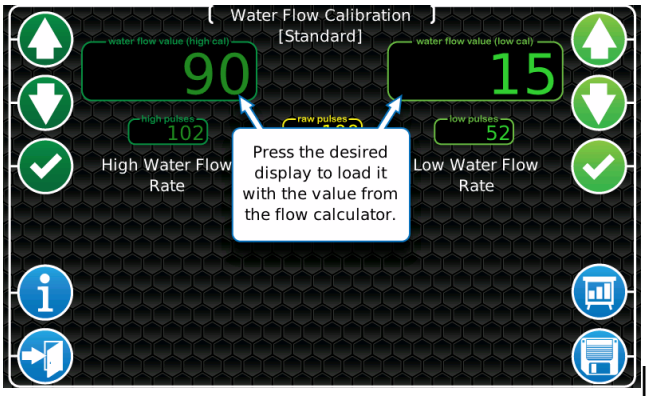

©HALE PRODUCTS, INC. Our policy is one of continuous development. We therefore reserve the right to amend specifications without notice or obligation.

5. Press the “check mark” button on the desired side (high or low). Make sure that the value in the yellow “raw pulses” display window is now in the green “high pulses” (or “low pulses”) display window.

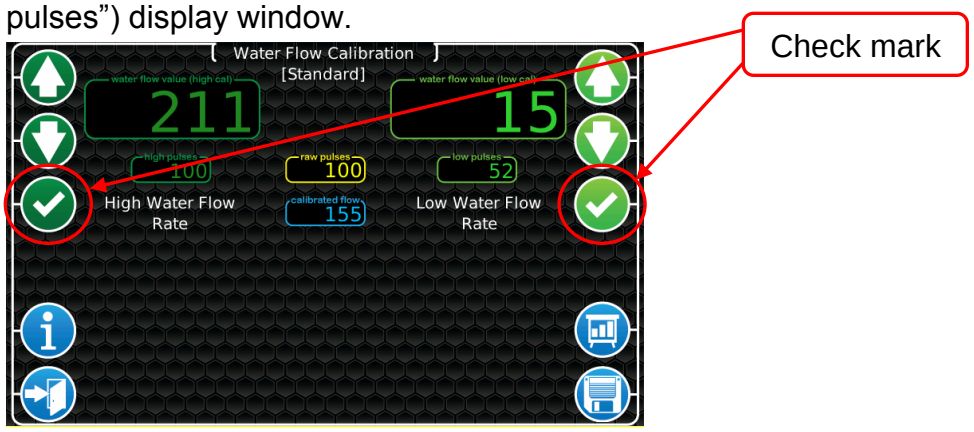

6. Perform these same steps for the other flow rate.

7. Press the “save” button to complete the calibration. Decrease the throttle and stop water flow.

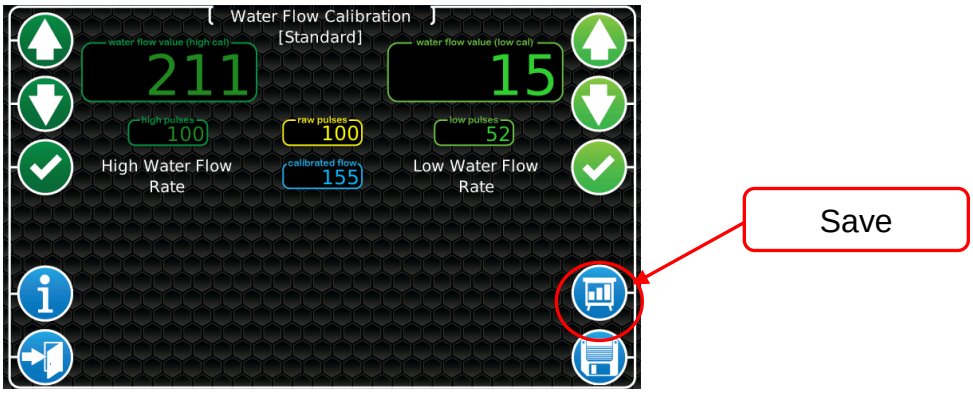

8. Press the “exit” button to return to the calibration menu.

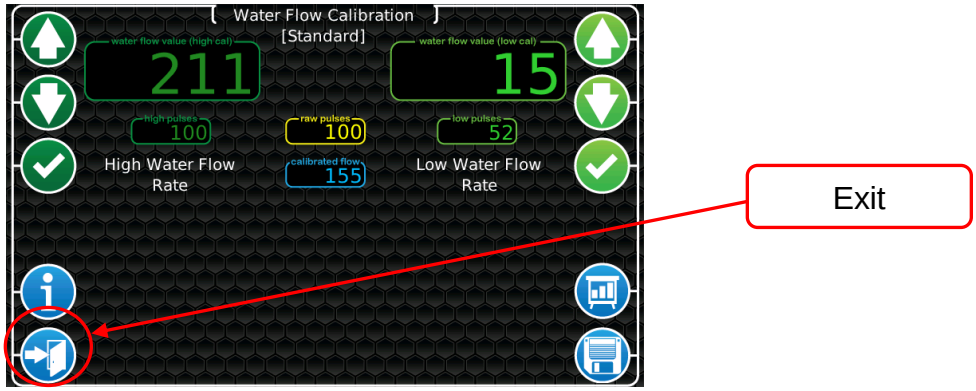

©HALE PRODUCTS, INC. Our policy is one of continuous development. We therefore reserve the right to amend specifications without notice or obligation.

WATER FLOW CALIBRATION (DIRECT)

The direct water flow calibration is simply a means of entering the values from a previous water flow calibration without the need to actually flow water. The direct water flow calibration requires the known values for the water flow value and its related water flow pulses (high and low) from a previously completed calibration. This is typically used when having to replace the SmartCAFS Controller or when another vehicle is determined to be exactly the same as a previous vehicle.

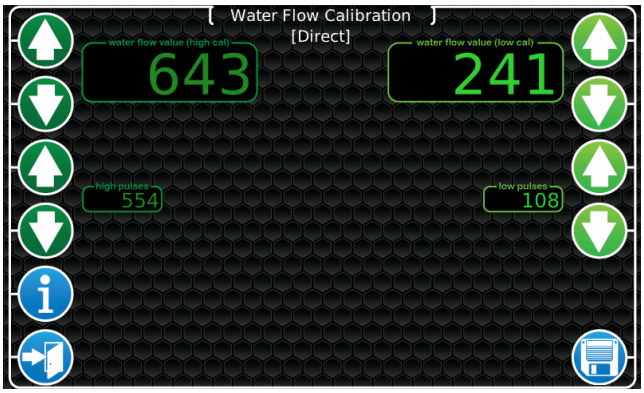

FOAM FLOW CALIBRATION

The foam flow calibration requires the discharge of a known quantity of foam concentrate into a calibrated container.

NOTE: *Be sure to set the foam bypass handle into the "bypass" position so that the discharged foam concentrate may be collected.*

1. Place the foam bypass handle into the "bypass" position.

2. Place the calibrated container so that it will be filled with foam concentrate as it is discharged through the bypass hose.

3. Press the power button.

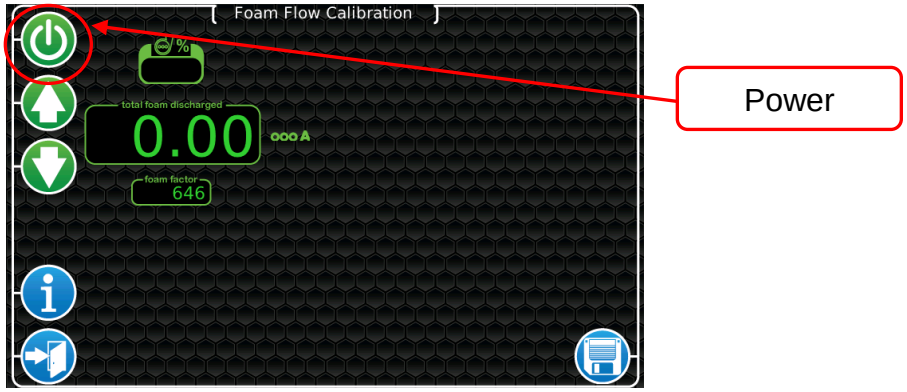

4.

©HALE PRODUCTS, INC. Our policy is one of continuous development. We therefore reserve the right to amend specifications without notice or obligation.

5. The bar graph will increase to indicate that the foam pump is running and the system will begin discharging foam concentrate. The “total foam discharged” display will begin incrementing.

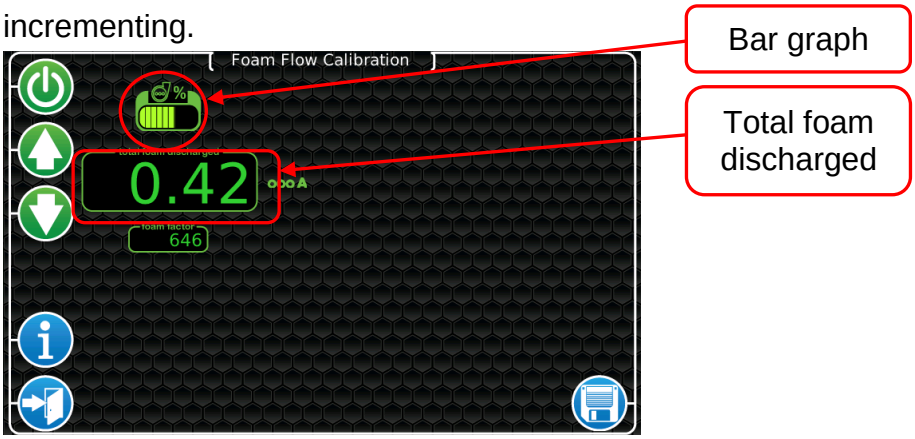

6. When the foam concentrate has filled the container to a known level press the power button again to stop the foam system.

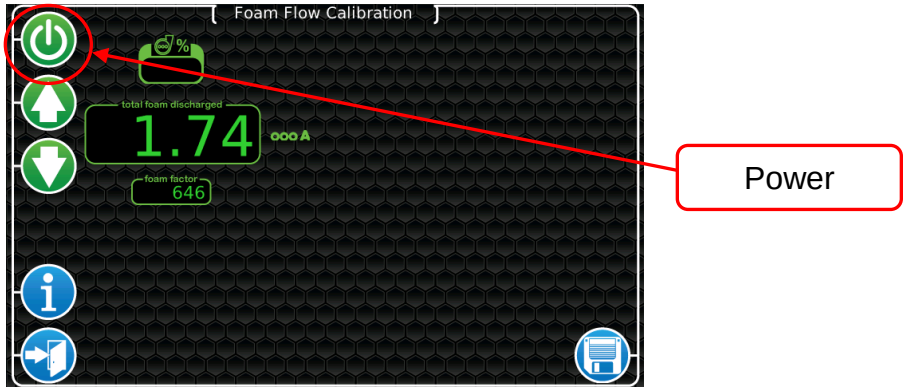

7. Use the UP/DOWN arrow buttons to change the value shown in the “total foam discharged” window to reflect the value actually collected in the container (the “foam factor” value will be changing, but in the inverse direction).

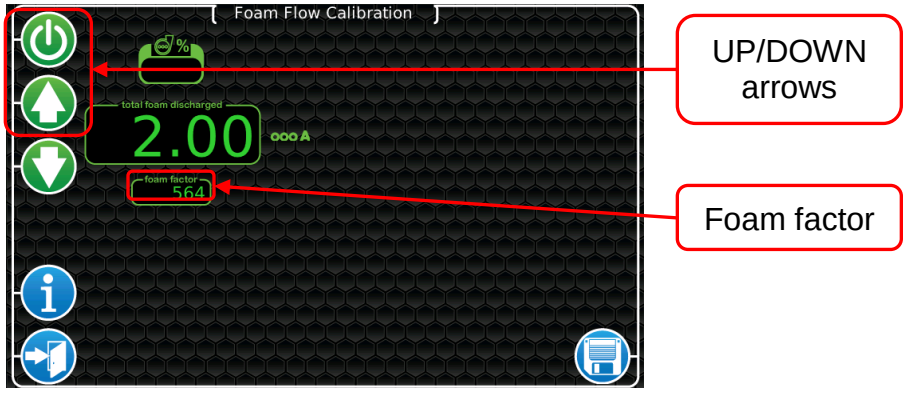

©HALE PRODUCTS, INC. Our policy is one of continuous development. We therefore reserve the right to amend specifications without notice or obligation.

8. Press the “save” button. Press the “exit” button to return to the calibration menu.

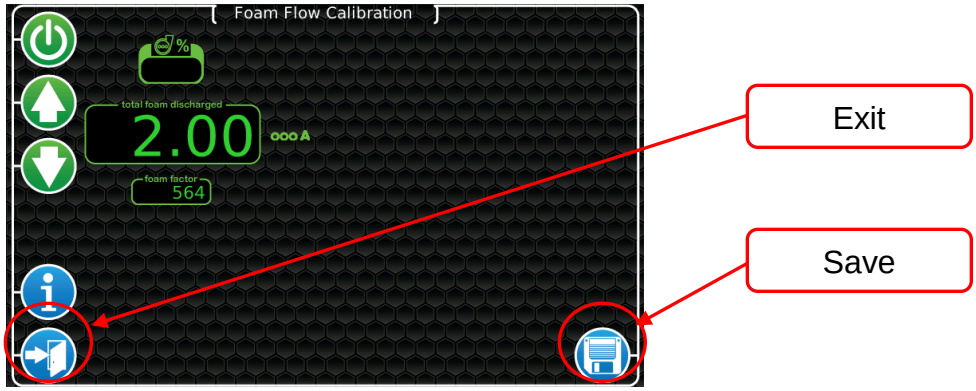

9. Place the bypass handle back to the “inject” position.

©HALE PRODUCTS, INC. Our policy is one of continuous development. We therefore reserve the right to amend specifications without notice or obligation.

CONFIGURATION

PRESET CONFIGURATION (STANDARD)

The SmartCAFS Controller allows up to 10 presets to be configured. These presets can be set for foam only or foam and air (CAFS).

Enter the password **1023** in the system menu's keyboard to open the preset configuration menu.

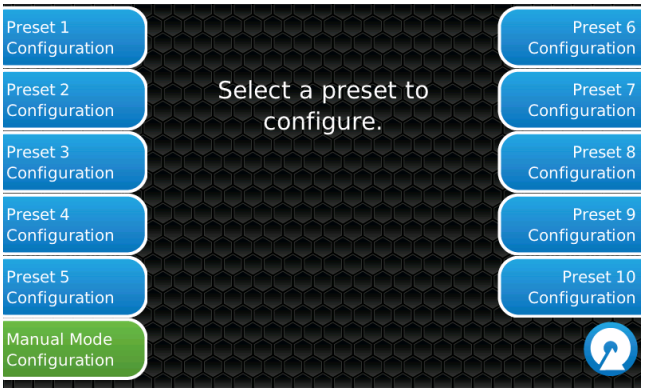

Select the preset to configure and that preset's configuration screen will be shown.

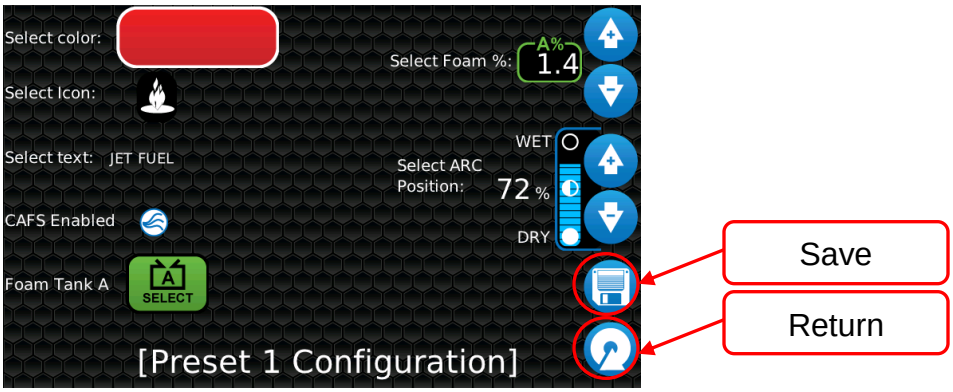

Select color: - select the color for the preset's bar (green, red, orange, purple, blue, disabled). If "disabled" is selected then the preset is turned OFF.

Select icon: - select the icon to use for this preset.

Select text: - pops-up a keyboard so that text can be set for this preset (9 characters per line, up to 3 lines).

CAFS enabled/disabled - select whether this preset will be using CAFS or foam only.

Foam Tank: - select which foam tank is used with this preset. If the foam selector is not set for the correct tank the SmartCAFS Controller will pop-up a warning to inform the operator to switch to the correct tank.

Select foam %: - set the foam concentrate percentage required for this preset (this option is only visible if CAFS is enabled for this preset).

Select ARC position: - set the consistency of the CAFS by setting the Air Ratio Control valve between WET and DRY (this option is only visible if CAFS is enabled for this preset).

"Save" button - save this preset to memory.

"Return" button - return to the "select a preset" configuration menu.

©HALE PRODUCTS, INC. Our policy is one of continuous development. We therefore reserve the right to amend specifications without notice or obligation.

PRESET CONFIGURATION (LIVE)

Once a preset has been configured via the standard configuration it may not have produced the CAFS consistency desired. The “live” preset configuration allows the operator to flow CAFS while adjusting the consistency and then re-save that new value to the desired preset.

Enter the password **40692** in the system menu’s keyboard to open the user menu. This enables the “live” preset ability. Information banners will pop-up to indicate that the “live” preset ability has been activated. Touch the banner to dismiss the message.

NOTE: *You must recycle the SmartCAFS Controller’s power to disable the live preset configuration.*

1. Select the desired preset from the preset page. You will notice a “save” icon above the currently selected preset (bottom left corner of the screen).

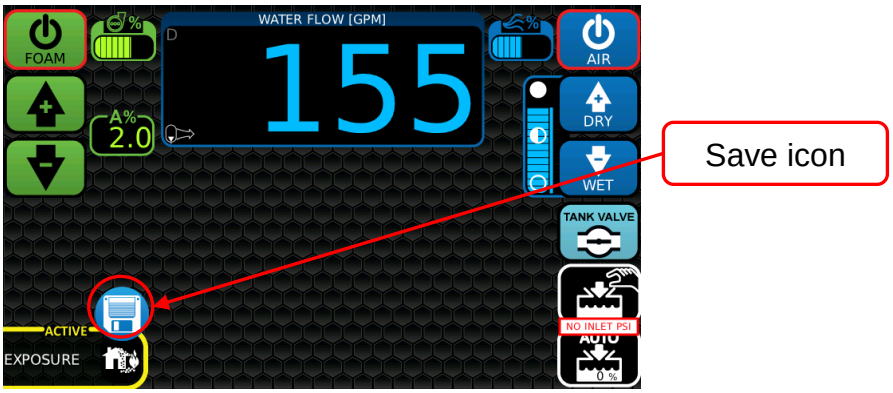

2. Run the CAFS and adjust the CAFS consistency as desired (WET/DRY buttons).

3. Press the button next to the currently selected preset indicator. The “saving” indicator will appear momentarily indicating that the new consistency has been saved.

©HALE PRODUCTS, INC. Our policy is one of continuous development. We therefore reserve the right to amend specifications without notice or obligation.

ON-SCREEN WARNINGS AND INFORMATION

The SmartCAFS Controller uses on-screen pop-up warnings and information to indicate system status to the operator.

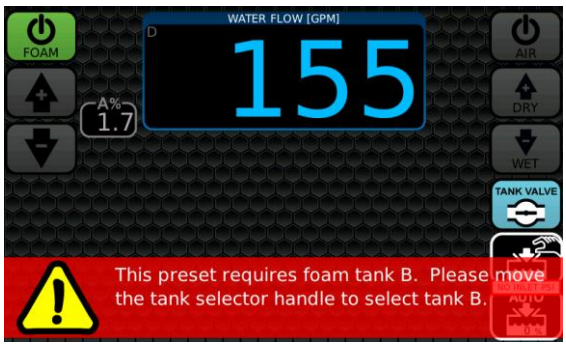

Figure 31 Warnings use a red background

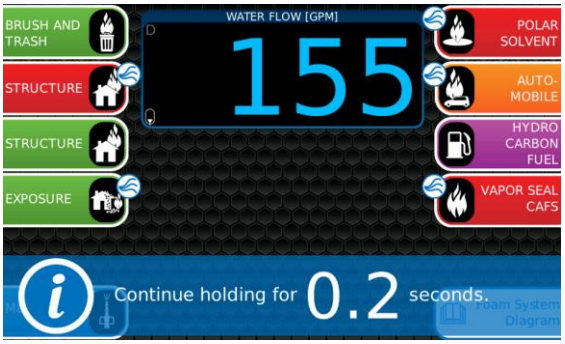

Figure 32 Information uses a blue background

Touch the warning/information to dismiss it (inhibited). The warning will be hidden for the number of seconds set in the OEM menu's "warning inhibit timeout." If the condition that caused the warning still exists, then the warning will pop-up again.

©HALE PRODUCTS, INC. Our policy is one of continuous development. We therefore reserve the right to amend specifications without notice or obligation.

MAINTENANCE MINDER

This reminder in Figure 33 is only displayed at initial power up and won't return until the next power cycle if maintenance is still due. Touch anywhere on the screen or any button to clear the reminder.

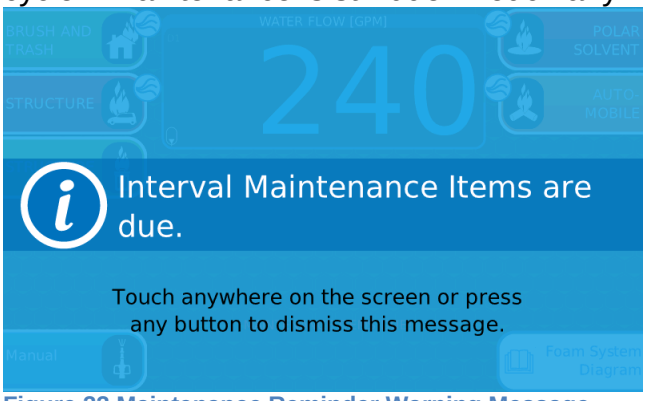

Figure 33 Maintenance Reminder Warning Message

Figure 34 shows the "maintenance minder" bar when maintenance items are due (the background of the bar turns from blue to red). When no items are past due the button will be blue.

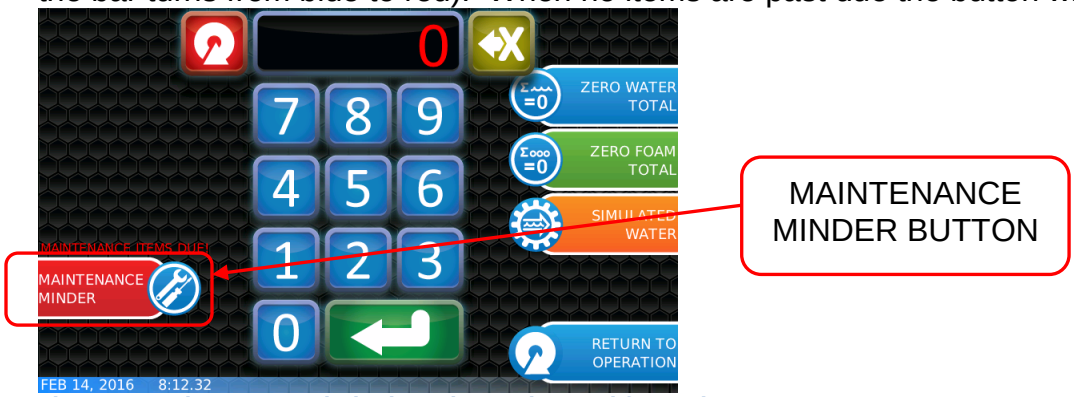

Figure 34 Maintenance Minder has changed to Red from Blue

The maintenance minder page shows the maintenance intervals and when they will be due. The pie chart provides a visual indication of how much time until the maintenance is required.

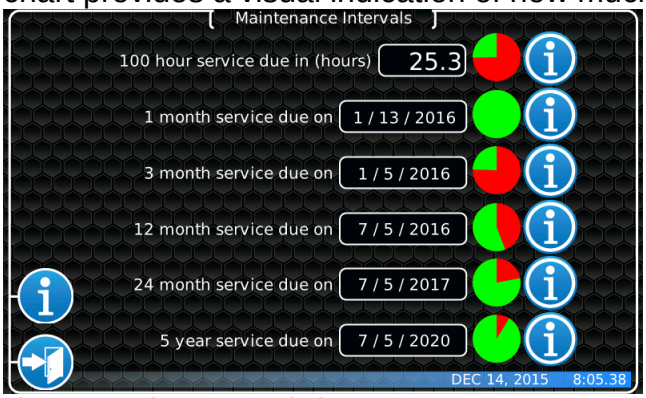

Figure 35 Maintenance Minder Page

©HALE PRODUCTS, INC. Our policy is one of continuous development. We therefore reserve the right to amend specifications without notice or obligation.

When maintenance is due it will be indicated by a fully red pie chart and the text “DUE”. Press the “i" button next to any maintenance interval to see what maintenance is required.

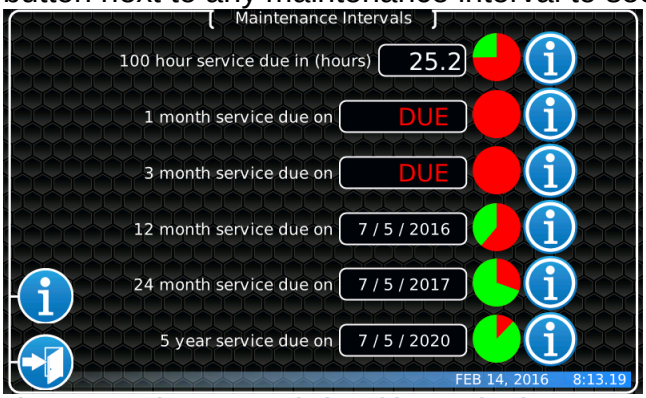

Figure 36 Maintenance Minder with past due items

The tutorial button (“i” on the left side) will explain the windows, pie charts, information button, and how to reset the maintenance schedule (requires password).

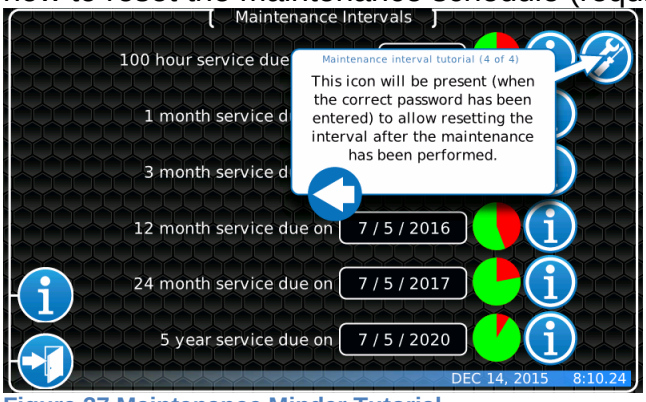

Figure 37 Maintenance Minder Tutorial

When the maintenance password has been entered the maintenance screen will have the maintenance reset button next to each interval item.

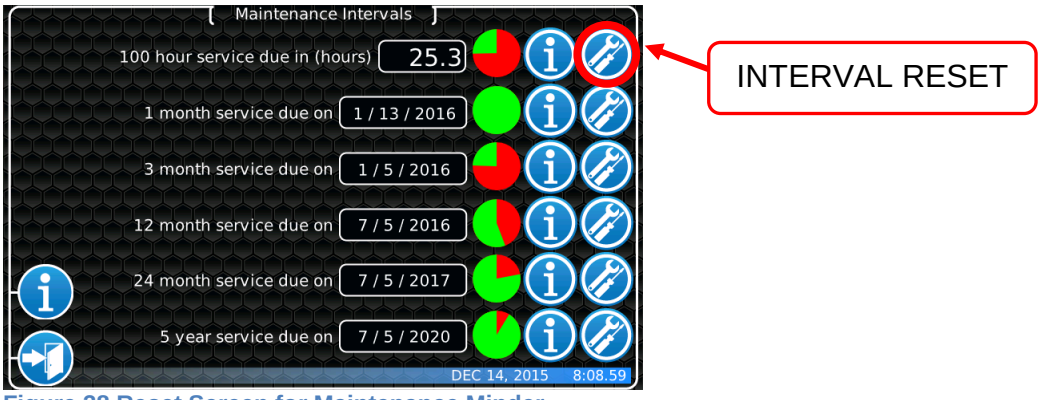

Figure 38 Reset Screen for Maintenance Minder

©HALE PRODUCTS, INC. Our policy is one of continuous development. We therefore reserve the right to amend specifications without notice or obligation.

ROUTINE MAINTENANCE

Between operations of the SmartCAFS unit make sure system components are filled with the proper grade and amount of oil. These components include the Air Compressor System and the Drive Unit Gearbox.

The following procedures are provided to assist in the periodic maintenance of oil levels. For detailed maintenance instructions of individual components, refer to the maintenance and operation manuals that were supplied with the apparatus.

Service should be performed by a trained and qualified service technician, or your authorized Hale Products service representative. Be sure you have sufficient knowledge, experience, proper tools and Hale genuine replacement parts before you attempt any repair maintenance.

For an illustrated SmartCAFS system, see: “MAJOR COMPONENTS AND CONTROLS” on page 14.

⚠WARNING⚠

DO NOT PERFORM MAINTENANCE ON THE SmartCAFS SYSTEM WHILE THE APPARATUS IS RUNNING. MAKE SURE THE APPARATUS IS SHUT DOWN AND COMPONENTS HAVE COOLED BEFORE ATTEMPTING MAINTENANCE.

THE PROPER OIL LEVEL MUST BE MAINTAINED IN THE AIR COMPRESSOR SYSTEM AT ALL TIMES. LOW OIL LEVEL OR NO OIL COULD RESULT IN EXCESSIVE COMPRESSOR TEMPERATURE AND MAJOR DAMAGE. HIGH OIL LEVEL COULD CAUSE THE CONTROL SYSTEM TO MALFUNCTION OR CAUSE A DRIVE FAILURE.

©HALE PRODUCTS, INC. Our policy is one of continuous development. We therefore reserve the right to amend specifications without notice or obligation.

AIR COMPRESSOR MOISTURE DRAIN

After the air compressor system is used and has had time to COOL to ambient temperature, accumulated moisture must be drained from the oil reservoir separator.

Drain Moisture

To drain the moisture from the system, locate the oil and moisture drain valve on the bottom of the oil reservoir separator. See: “MAJOR COMPONENTS AND CONTROLS” on page 14.

1. Place a suitable container 8 to 10 ounces (237 to 296 ml) under the compressor drain valve and remove the brass valve plug.

2. Open the valve and allow the water to drain. The oil drain valve is a 1/4” NPT ball valve.

3. Monitor the flow. As soon as pure oil begins flowing, CLOSE the valve.

4. Replace the brass valve plug in the valve and check the oil level.

ATTENTION

DISPOSE OF THE WASTE WATER/OIL IN ACCORDANCE WITH YOUR LOCAL RECYCLING REGULATIONS.

Note: In humid weather, after short run times, up to 8 ounces (237 ml) of condensation could accumulate. Running the compressor for longer periods automatically removes moisture through the discharge with the air and heating of the oil.

©HALE PRODUCTS, INC. Our policy is one of continuous development. We therefore reserve the right to amend specifications without notice or obligation.

OIL AND OIL FILTER

NOTE: The air compressor oil and oil filter must be changed every **100** hours of operation or when the apparatus engine oil is changed.

To Change Oil and Oil Filter

NOTE: Reference pages 14 & 33 for drain & component locations.

1. Locate the oil reservoir separator and air compressor oil filter on the apparatus

2. Place a waste container below the drain valve to catch the oil or moisture as it drains. The container must have sufficient capacity to hold the drained oil, approximately 8 to 9 quarts (7.5 to 8.5 litres).

3. Remove the valve plug and OPEN the valve to drain all oil.

4. When all oil has drained from the system, CLOSE the valve and REPLACE the valve plug.

5. Place the waste container under the oil filter and unscrew the filter from its mount adapter. An oil filter strap-wrench might be necessary to loosen the filter.

6. Drain remaining oil from the filter.

⚠ ATTENTION ⚠

DISPOSE OF THE WASTE WATER / OIL AND OIL FILTER IN ACCORDANCE WITH YOUR LOCAL RECYCLING REGULATIONS.

7. Obtain a “new” Fram HP6A oil filter (Hale p/n: 010-0650-01-0). (Currently a substitute does not exist.) Before installing the new filter, lightly coat the filter gasket with SAE 15W-40HD oil, and then fill the filter approximately 1/2 full with SAE 15W-40HD oil.

NOTE: The oil filter must have a 200 PSI (14 BAR) pressure rating, as well as a screen over the bypass valve. The bypass screen catches large particles when oil bypasses the filter.

⚠ CAUTION ⚠

USE THE EXACT REPLACEMENT OIL FILTER (Fram HP6A, Hale p/n: 010-0650-01-0). OTHER FILTER TYPES MAY NOT WITHSTAND THE SYSTEM PRESSURE AND OIL FILTER FAILURE COULD LEAD TO A MAJOR COMPRESSOR FAILURE.

8. Screw the new oil filter onto the oil filter adapter being careful not to cross thread the filter. Initially tighten the filter hand-tight, and then tighten an additional 1/2 to 3/4 turn using an oil filter wrench.

9. Remove the oil fill plug from the fill pipe located on the oil reservoir separator. See sheet 35

10. Refill system with oil. The system requires approximately 8 to 9 quarts (7.5 to 8.5 liters) of SAE 15W-40HD motor oil. The proper oil level is when oil is visible in 1/2 to 3/4 of the sight gauge when the compressor is NOT running.

©HALE PRODUCTS, INC. Our policy is one of continuous development. We therefore reserve the right to amend specifications without notice or obligation.

⚠ WARNING ⚠

ALWAYS ALLOW OIL TO SETTLE PRIOR TO CHECKING LEVEL. DO NOT OVERFILL THE SYSTEM.

THE PROPER OIL LEVEL MUST BE MAINTAINED IN THE AIR COMPRESSOR SYSTEM AT ALL TIMES. LOW OIL LEVEL OR NO OIL COULD RESULT IN EXCESSIVE COMPRESSOR TEMPERATURE AND MAJOR DAMAGE. HIGH OIL LEVEL COULD CAUSE THE CONTROL SYSTEM TO MALFUNCTION OR A DRIVE FAILURE.

11. When the system is filled to the proper level, check and clean the O-ring seal on the fill plug, then replace the plug. DO NOT over-tighten.

12. Start the system and energize the air compressor to allow pressure to build and circulate oil through the hoses.

⚠ WARNING ⚠

WHEN STARTING DSD SmartCAFS UNIT DURING MAINTENANCE, MAKE SURE ALL TOOLS AND LOOSE CLOTHING ARE KEPT AWAY FROM ROTATING COMPONENTS. KEEP HANDS, FACE AND ARMS AWAY FROM ROTATING COMPONENTS WHILE SYSTEM IS OPERATING.

13. DO NOT allow the system to operate for more than 30 seconds. While the system is running check for leaks at the oil filter, drain plug and fill plug.

14. Shut down the system and allow the air compressor oil to settle.

15. Check oil level and add oil as necessary until oil is visible in 1/2 to 3/4 range of the sight gauge tube.

16. Shut down the system.

COOLING WATER STRAINER

The stainless steel mesh strainers prevent any solids or debris in the pump water from passing into the heat exchanger where they can clog and lead to overheating and serious damage. They can be easily cleaned using warm water, and/or then replaced.

⚠ WARNING ⚠

DO NOT REMOVE STRAINER CAP WHILE PUMP IS RUNNING.

The strainer should be cleaned and checked after each use or every month. The 1-1/2” NST Cap is located on the passenger side of the apparatus.

- The stainless steel mesh basket pulls out for cleaning.
- Clean thoroughly using warm water. Replace if the screen is ripped or damaged. Order Hale p/n: 010-0670-00-0.

AIR CLEANER ELEMENT

Change the air cleaner element on the SmartCAFS System every time the engine air filter is changed. Order Hale p/n: 010-0690-00-0.

©HALE PRODUCTS, INC. Our policy is one of continuous development. We therefore reserve the right to amend specifications without notice or obligation.

COMPRESSOR BELT MAINTENANCE

REMOVE BELT GUARD

To expose the belt, the belt guard, 6 screws, and hardware must be removed.

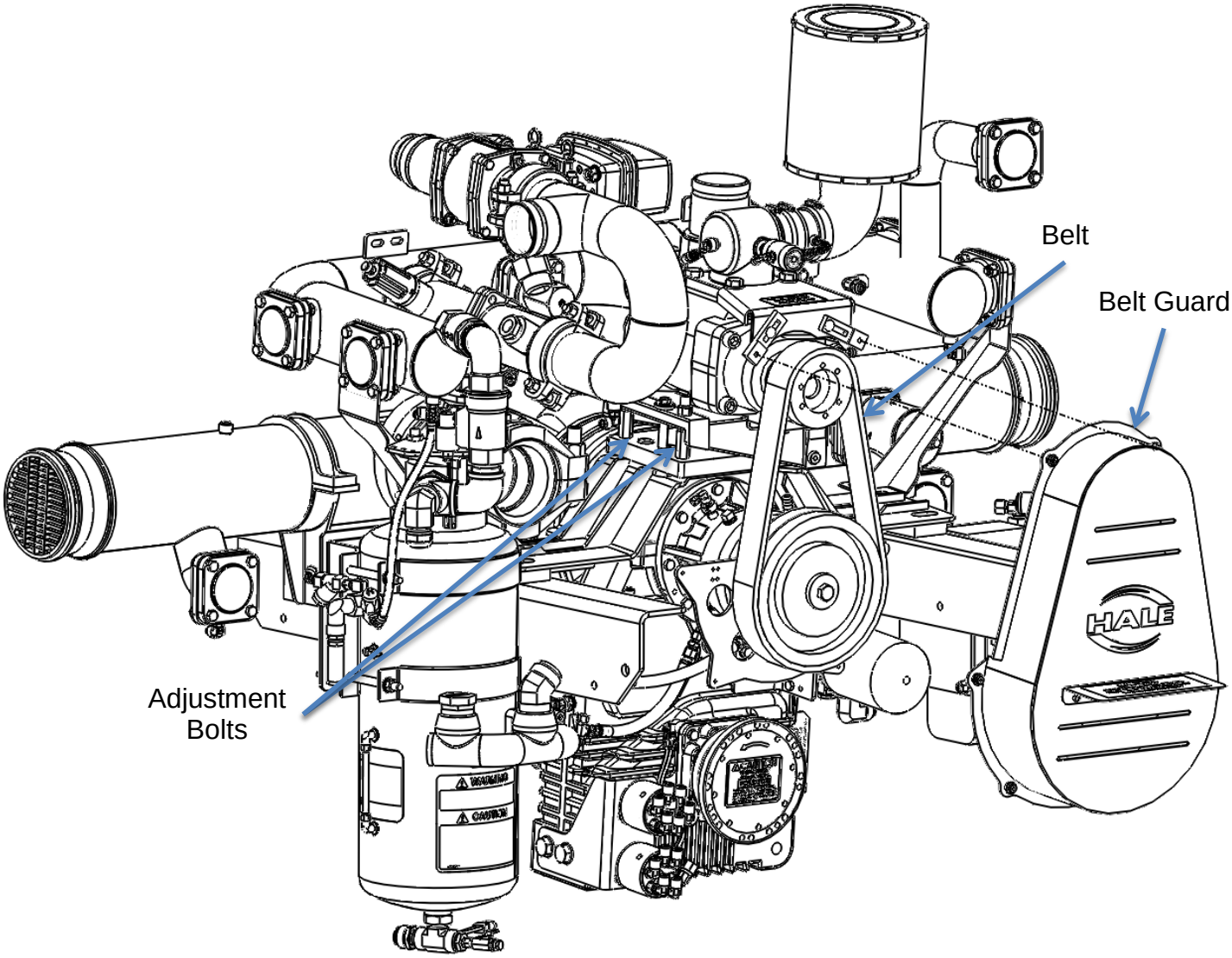

Figure 39 Belt Guard Location (DSD Shown)

⚠ATTENTION⚠

Proper belt tension is critical to long equipment life. A loose belt causes a knock or bang as the teeth jump. An over tightened belt overloads the bearings and leads to premature wear or failure.

©HALE PRODUCTS, INC. Our policy is one of continuous development. We therefore reserve the right to amend specifications without notice or obligation.

CHECKING BELT TENSION

1. Use a belt tension gauge to determine the tension applied to the belt and check on the left side of the unit (See Figure 40).
2. From the front tip of the gauge, measure back 5/ 16” (8 mm) and position the large O-ring accordingly. (See Figure 41)
3. Slide the smaller O-ring as close as possible to the body of the gauge setting “0.”
4. Make sure that the body of the strain gauge is perpendicular to the belt when applying force. (See Figure 40) Push gauge towards the belt until the body of the gauge moves 5/16” (8 mm) along the scale (or ruler) to the large O-ring setting. (See Figure 40)
5. Remove the gauge and read the tension established by the smaller O-ring. (See Figure 41) If tension is lower than 16 lbs. (7 kg.), the belt is loose; if the tension is greater than 20 lbs. (9kg.), the belt is too tight. To adjust, see heading “Adjusting Belt Tension.”

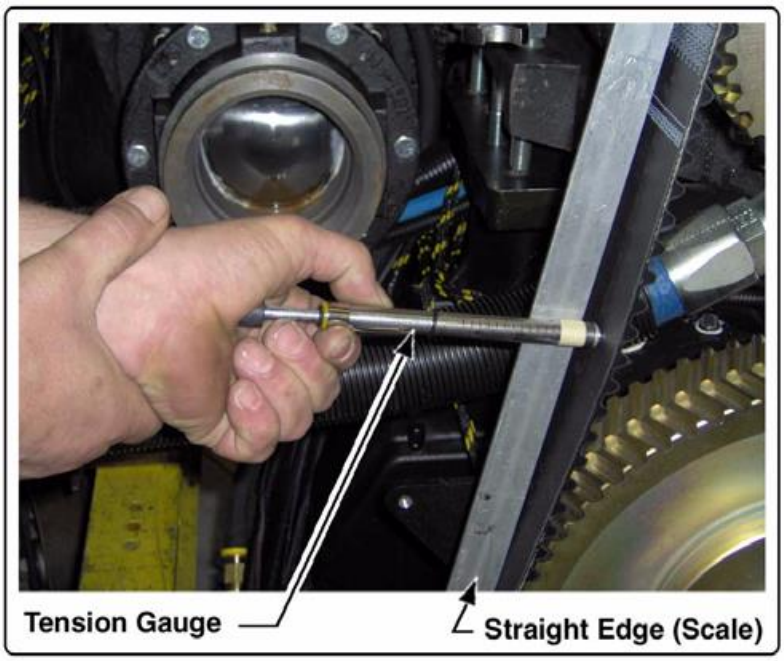

Figure 40 Measuring Tension using a Scale

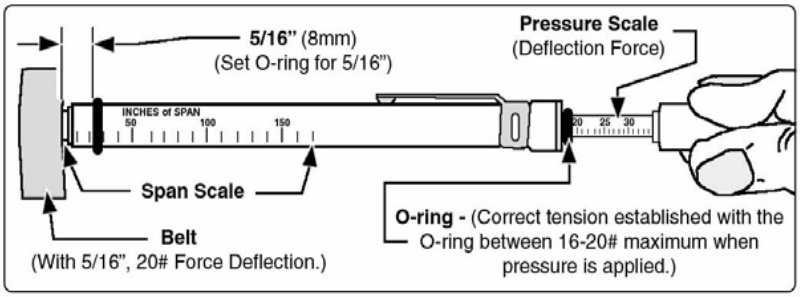

Figure 41 Belt Tension Gauge

NOTE: *The tension gauge shown is a Goodyear® Industries, Tension Tester. (Order from Hale Products, p/n: 029-0680-00-0.)*

©HALE PRODUCTS, INC. Our policy is one of continuous development. We therefore reserve the right to amend specifications without notice or obligation.

ADJUSTING BELT TENSION

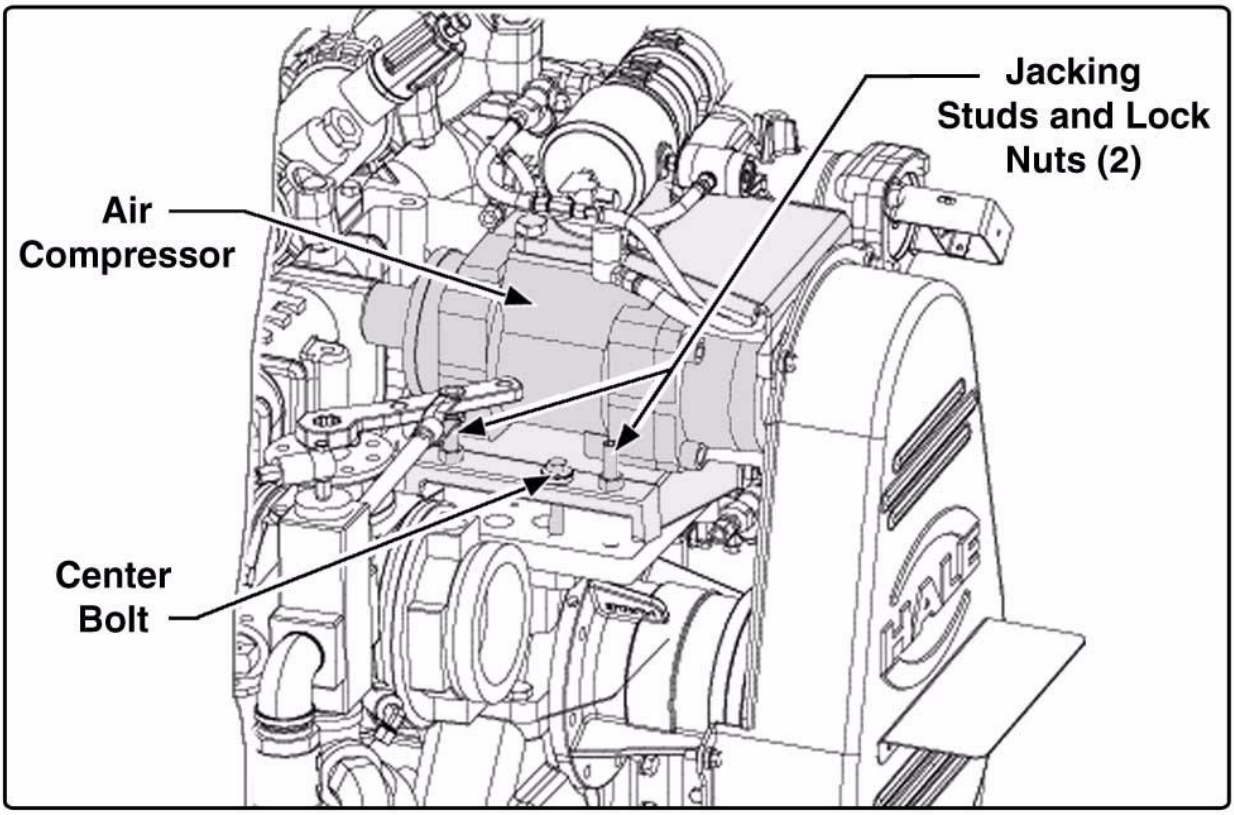

Figure 42 Belt Tension Adjustment Bolts

1. If the belt tension is less than required:
    a. Loosen the center bolt located in the middle of the compressor mounting bracket. (See Figure 42)
    b. Tighten two jacking studs located at both ends of the mounting bracket.

2. If the belt tension is tighter than required:
    a. Loosen the two studs located at both ends of the mounting bracket. (See Figure 42)
    b. Tighten bolt located in the middle of the compressor mounting bracket. Also tighten the two lock nuts against the bracket.

3. Verify that the belt tension is within the required limits. Readjust accordingly.

©HALE PRODUCTS, INC. Our policy is one of continuous development. We therefore reserve the right to amend specifications without notice or obligation.

HOT SHIFT CLUTCH MAINTENANCE

NOTE: *The hot shift clutch oil should be changed every 100 hours of operation or when the apparatus engine oil is changed. (See Figure 43)*

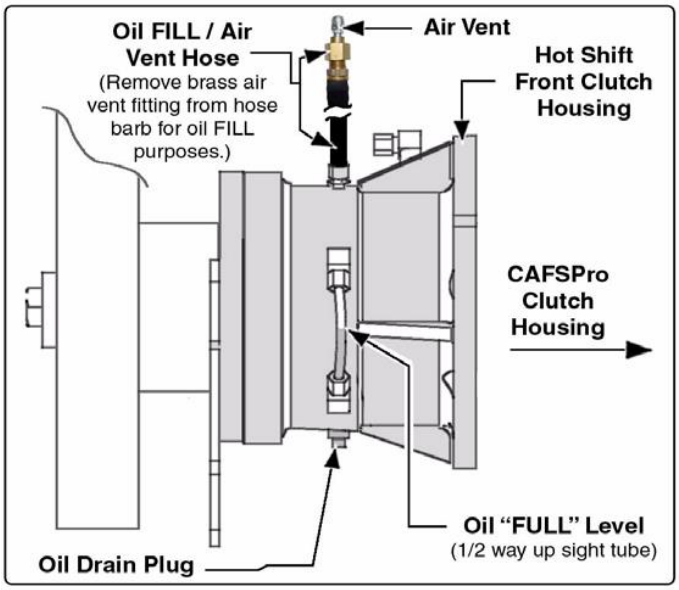

Figure 43 Hot Shift Operation

CHANGING CLUTCH OIL

1. Place a suitable container 12 to 14 ounces under the hot shift front clutch housing and remove the brass drain plug.

2. Drain all oil then reinstall the brass drain plug.

3. Remove the brass fitting, containing the air vent, from the fill tube hose barb. (See Figure 43)

⚠ ATTENTION ⚠

DISPOSE OF THE WASTE WATER/OIL IN ACCORDANCE WITH YOUR LOCAL RECYCLING REGULATIONS.

4. Using a squeeze bottle or funnel, refill the housing via the hose barbed fitting and fill hose with Dexron III or Mercon ATF or equal, ***while watching the oil level sight gauge***. The housing holds approximately twelve (12) ounces (0.4 liters). The proper oil level is when the oil level sight tube is filled half way between the top and bottom.

⚠ WARNING ⚠

ALWAYS ALLOW OIL TO SETTLE PRIOR TO CHECKING LEVEL. DO NOT OVERFILL THE SYSTEM.

THE PROPER OIL LEVEL MUST BE MAINTAINED IN AT ALL TIMES. LOW OIL LEVEL OR NO OIL COULD RESULT IN EXCESSIVE OPERATING TEMPERATURES CAUSING MAJOR DAMAGE. HIGH OIL LEVEL COULD CAUSE THE SYSTEM TO MALFUNCTION OR COULD CAUSE A DRIVE FAILURE.

©HALE PRODUCTS, INC. Our policy is one of continuous development. We therefore reserve the right to amend specifications without notice or obligation.

MAINTENANCE SCHEDULE FOR SMARTCAFS

NOTE: *The HALE service intervals replace those in the Gardner Denver Compressor manuals.*

EQUIPMENT	ACTION	Click below for Procedure W/ Internet Hyperlinks or Internal Page Links
EVERY 3 MONTHS		
DSD	Check the pump and gearbox oil levels	Page **33**
	Do a vacuum test to test for leaks	Page **82**
Compressor	Check the oil level and top up if necessary. Run compressor for 15 minutes	Page **34**
	Check the drive belt tension and condition.	Page **76**
Mixing Manifold	Grease air ratio control ball valve	Page **81**
Foam unit 3.3/5.0/6.5	Check that foam pipe connections are tight	Foam unit Manual 029-0020-68-0
	Operate the system in bypass to move the concentrate and prevent gelling (if concentrate is left in the system **without use** for three months)	Foam unit Manual 029-0020-68-0
EVERY 12 MONTHS		
Compressor	Change the air filter	Page **75**
	Change the oil and oil filter	Page **74**
Hot Shift Clutch	Change the oil	Page **79**
Gearbox	Change the gearbox oil	DSD Maintenance Manual 029-0020-93-0
Pump	Inspect the anode, replace if needed	DSD Maintenance Manual 029-0020-93-0
Priming pump	Clean & lubricate	HSB64
Suction Manifold	Inspect the anodes, replace if needed	Page **92**
Foam unit 3.3/5.0/6.5	Inspect wiring/connections, hoses/connections	Foam unit Manual 029-0020-68-0
	Clean the foam strainer	Foam unit Manual 029-0020-68-0
	Verify water flow calibration	Foam unit Manual 029-0020-68-0
	Verify foam feedback calibration	Foam unit Manual 029-0020-68-0
EVERY 24 MONTHS		
Compressor	Replace the oil separator element	CAFS Maintenance & Repair Manual 101-2850-00-0
EVERY 5 YEARS		
Compressor	Replace the compressor drive belt	Page **76**

⚠ ATTENTION ⚠

In high usage or abnormal operating conditions, the above procedures may need to be more frequent. The best practise is to flush the system after each use. Intervals are automatically tracked in the UV Display under the maintenance tab.

©HALE PRODUCTS, INC. Our policy is one of continuous development. We therefore reserve the right to amend specifications without notice or obligation.

MAINTENANCE OPERATIONS PUMP – SMARTCAFS

CAFS MIXING MANIFOLD – GREASING BALL VALVE

The CAFS Mixing Manifold contains a ball valve as part of the air ratio control system.
This ball valve must be maintained by inserting lubricating grease at three monthly intervals to ensure smooth and efficient operation.

LUBRICANTS:

Use one of the following lubricants. DO NO substitute other lubricants.

• **Never-Seez** - White Food Grade with PTFE, manufactured by:

Bostik Findley, Inc.
211 Boston Street
Middleton, MA. 01949-2128
Web: http://www.bostik-us.com

• **White Knight** tm - Food Grade Anti-Seize Compound, manufactured by:

Jet Lube Inc.
4849 Homestead Road
Suite 500
Houston, TX 77028
Web: *www.jetlube.com*

• **Anti-Seize** tm - manufactured by:

U.S. Valve Service & Training, Inc.
11875 West Little York
Suite 502
Houston, TX. 77041
Web: WWW.USVALVESERVICES.COM
Also see SVS Torrent Installation and Service Maintenance Manual, Hale p/n: 029-0020-90-0, Section 4 “Routine Maintenance” for additional information.

The grease is inserted through one or two grease nipples. The first nipple is located on the side of the valve facing the discharge end of the manifold. If a second nipple is fitted, it will be on the other side of the manifold. Connect a suitable grease gun to the nipple and insert grease until a resistance is felt, this indicates that sufficient grease has been inserted.

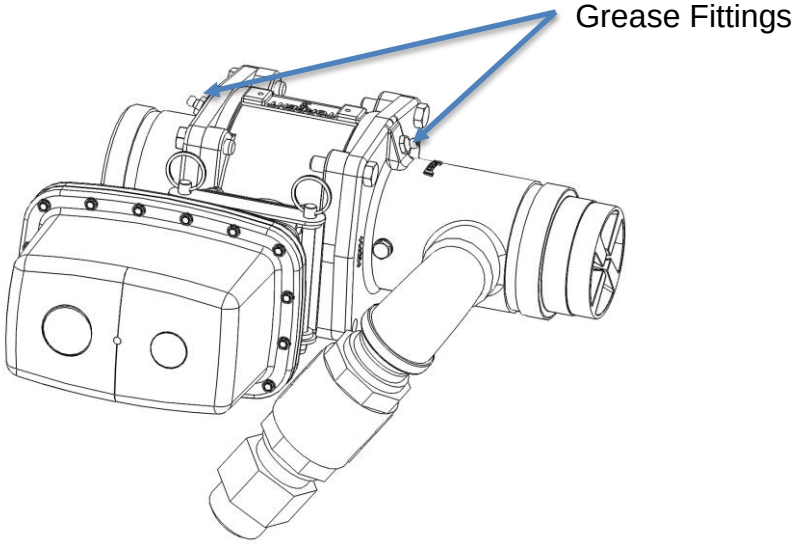

Figure 44 ARC VALVE

©HALE PRODUCTS, INC. Our policy is one of continuous development. We therefore reserve the right to amend specifications without notice or obligation.

VACUUM TEST PUMP MANIFOLD

If the pump will not hold the vacuum with the blanking caps in position, a leak is present in the pump, and the pressure test detailed below must be carried out to trace it.
Should the pump not reach a vacuum of 20inHg [0.7bar] but will hold a lower pressure, a fault in the priming system is indicated.
If the pump will not achieve 22inHg [0.74bar] vacuum for NFPA, and will not hold what it does achieve, there is a leak, and possibly also a fault, in the priming system.

Check as follows:
Check the priming pump performance and related hose connections between the priming pump and primer valve. Debug the priming system as described in ***HALE Service Bulletin 64***. If the vanes are determined to be worn (sometimes indicated by smoke exhausting from the water exhaust port during operation), a rebuild kit is available as noted within the recommended spares kit section in this manual.

PRESSURE TEST – PERFORMED WITHOUT PUMP RUNNING

This test is to be carried out if the pump will not hold a vacuum with blanking cap(s) in position, and is intended to trace the leaks responsible for the loss of vacuum.
Apply a water pressure of 50 – 100 PSI [3.5 - 7.0 bar] to the DSD pump and check for leaks. The area causing the leak should be visible, and can be dismantled and rectified. If no leaks are apparent, the leakage must lie between the priming valve and the primer pump.

©HALE PRODUCTS, INC. Our policy is one of continuous development. We therefore reserve the right to amend specifications without notice or obligation.

CAFS - SETTING THE AIR BALANCE CONTROL VALVES

1. Symptoms of Improper Adjustment
    a. Air pressure fluctuates or bounces too far from water pressure on the duplex gauge:
        i. The snubber valve is open too much
    b. A “popping” sound is observed within the air intake filter & ducting:
        i. The snubber valve is closed too much.
2. Functionally Test Smart CAFS Air Pressure /Water Pressure & Adjust Match
    a. The water pump should be running at 700-800 RPM and discharging water.
    b. Turn system ON by pressing FOAM. LED bar graph on display should light up and foam should start pumping.

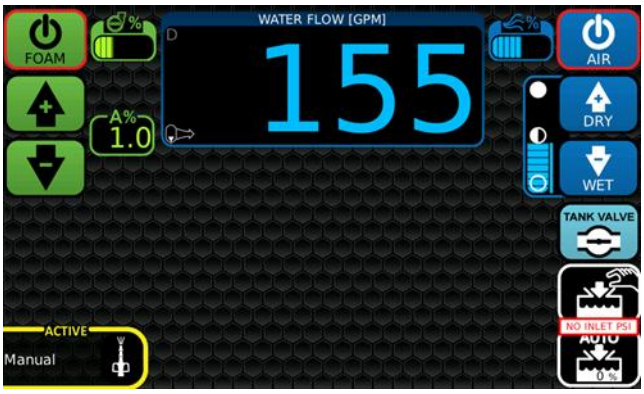

    c. Close the discharge valve completely on the CAFS manifold.
    d. While observing the duplex gauge, engage compressor clutch with the BLUE AIR power button AIR and increase engine speed and pump pressure to 75 PSI. Air pressure should follow & match while maintaining a stable reading.
    e. Adjust the flow valve located on the side of the air intake to increase or decrease the air flow/pressure for the compressor. Adjust the snubber valve on intake valve body (located on the top of the air compressor) to dampen out pulses and fluctuations to achieve smooth operation as indicated on the duplex gauge.
    f. Lock in place with lock nut. Repeat for “g” through “i” to fine tune compressor air pressure/water pressure match.

©HALE PRODUCTS, INC. Our policy is one of continuous development. We therefore reserve the right to amend specifications without notice or obligation.

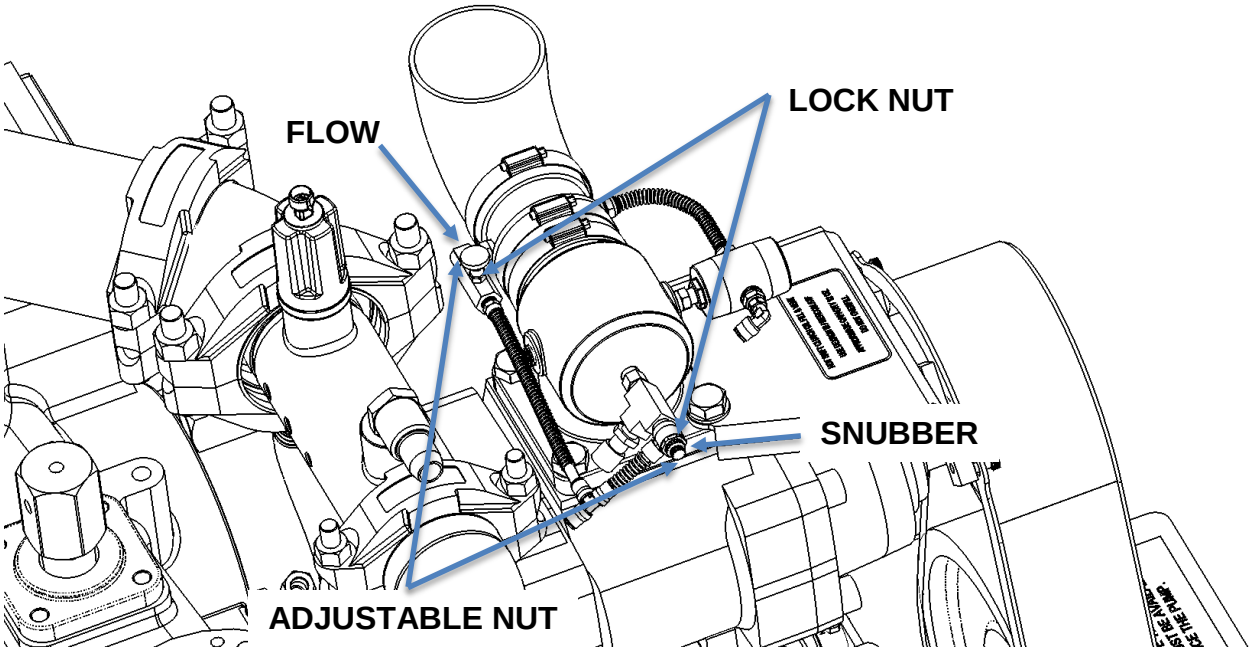

Figure 45 Compressor Intake Adjustment

g. Increase engine speed to 100 psi. Air pressure should follow.
h. Increase engine speed to 125 psi. Air pressure should follow.
i. Increase engine speed to 150 psi. Air pressure should follow.
j. Slowly reduce engine speed to 900 RPM. (Compressor will make howling noise that is much louder if speed is reduced quickly).

3. If the system is still not tracking then there might be an issue with the air balance valve.
   a. If you can't get the system to go wet, but can get it to go dry or there is a large delay in air pressure when increasing/decreasing water pressure. Grease the O-ring indicated in Figure 46.
   b. If you can't get the pressure to match in either wet or dry operation the air balance valve may be damaged. Remove the air balance valve and measure the ID of the water pressure inlet, if it is less than 5.97 mm it may be damaged.

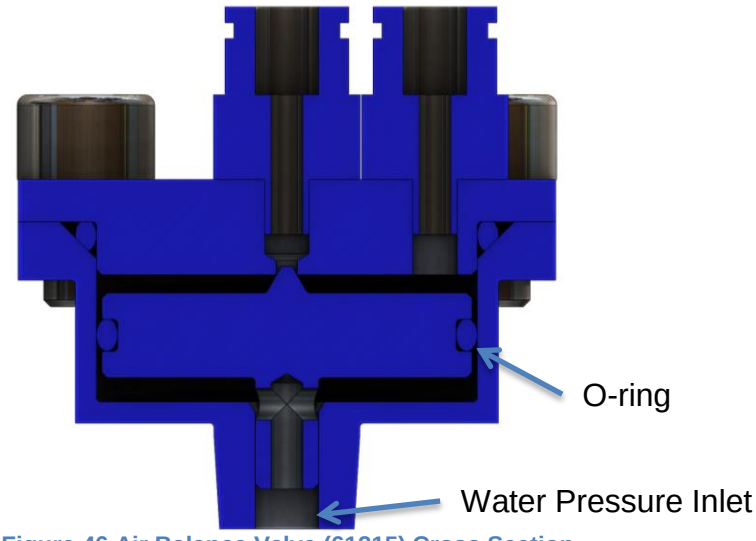

Figure 46 Air Balance Valve (61215) Cross Section

©HALE PRODUCTS, INC. Our policy is one of continuous development. We therefore reserve the right to amend specifications without notice or obligation.

CAFS – HOT SHIFT CLUTCH ENGAGEMENT

1. The hot shift clutch is engaged when the CAFS switch is activated.
    a. Pressing the CAFS enable switch to engage the hot shift clutch. “
    b. Pressing the AIR on the screen or button for 3 seconds will disengage the hot shift clutch.

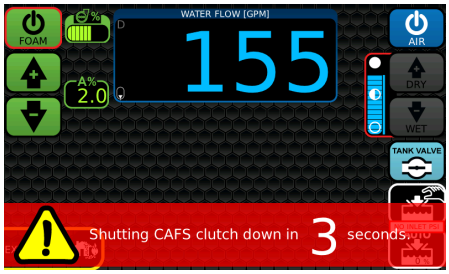

2. When the CAFS switch is activated, the clutch solenoid valve is then energized allowing pressurised air to engage the clutch.
3. Setting the hot shift clutch engagement:
    a. The solenoid valve controls how fast or slow the hot shift clutch engages.
    b. There is a flow control valve located on the air output side of the solenoid valve. Adjusting this flow control causes the hot shift clutch to engage faster or slower.
        i. Adjusting (closing) the flow control to engage the clutch too slowly will reduce the life of the clutch itself.
        ii. Adjusting (opening) the flow control to engage the too quickly will cause the pump to “shutter” & possibly cause the drive belt to jump a tooth.
    c. The standard HALE set point for the flow control is the following:
        i. Loosen the set screw on the side of the adjustment knob.
        ii. Rotate the adjustment knob inward to the closed position.
        iii. Rotate the adjustment knob outward 2-1/4 turns (until you see the beginning of the blue ring)
        iv. Lock the adjustment knob’s position by tightening the set screw on the side of the adjustment knob.
    d. Fine tuning beyond the standard set point may be necessary. This is completed by engaging the clutch & observing the performance of the pumping system & the compressor. Adjusting the flow control in or out slightly as needed after disengaging & re-engaging the clutch for best performance. Allow the pumping system to settle 5~10 seconds between engage & disengage cycles while adjustments are made.

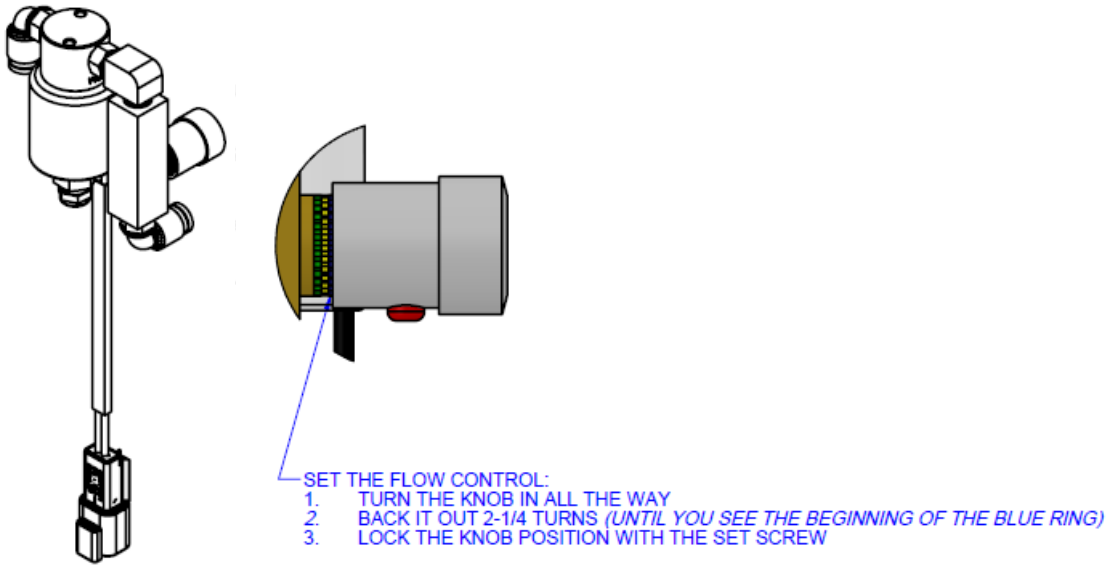

©HALE PRODUCTS, INC. Our policy is one of continuous development. We therefore reserve the right to amend specifications without notice or obligation.

RECOMMENDED SPARES KIT FOR SERVICE

Unit	Qty.	Item	Part Number	Comment
CAFS System				
	2	Filter - Oil	010-0650-01-0	
	2	Filter - Air	010-0690-00-0	
	1	Separator Element Replacement Kit	010-0950-00-0	
		Compressor Oil	SAE 15W-40HD	
		Hot Shift Oil	Dexron III or Mercon ATF	
	1	Air Inject Valve	546-00058-000	
PUMP				
	AR	Strainer - Hi Pressure	010-0670-00-0	
	3	Anode	029-0511-00-0	
	1	Priming Pump Repair Kit	501-3090-00-50	

NOTE: *Under normal conditions those items marked AR (As Required) are not deemed to be disposable. However, fluid strainers may be easily damaged during the cleaning process. Please exercise care when handling. It is at the customer's discretion whether said items are carried as 'off the shelf' spares.*

HALE PUMP ILLUSTRATED PARTS LIST

Please refer to:
DSD: 029-0020-93-0
Q-SERIES: 029-0020-63-0

COMPRESSOR ILLUSTRATED PARTS LIST

Please refer to:
Gardener Denver Enduro 12 manual.

FOAM UNIT ILLUSTRATED PARTS LIST

Please refer to:
Foam unit Model 3.3/5.0/6.5: 029-0021-68-0 or FSG-MNL-00158

©HALE PRODUCTS, INC. Our policy is one of continuous development. We therefore reserve the right to amend specifications without notice or obligation.

PARTS LIST

MAJOR ASSEMBLIES

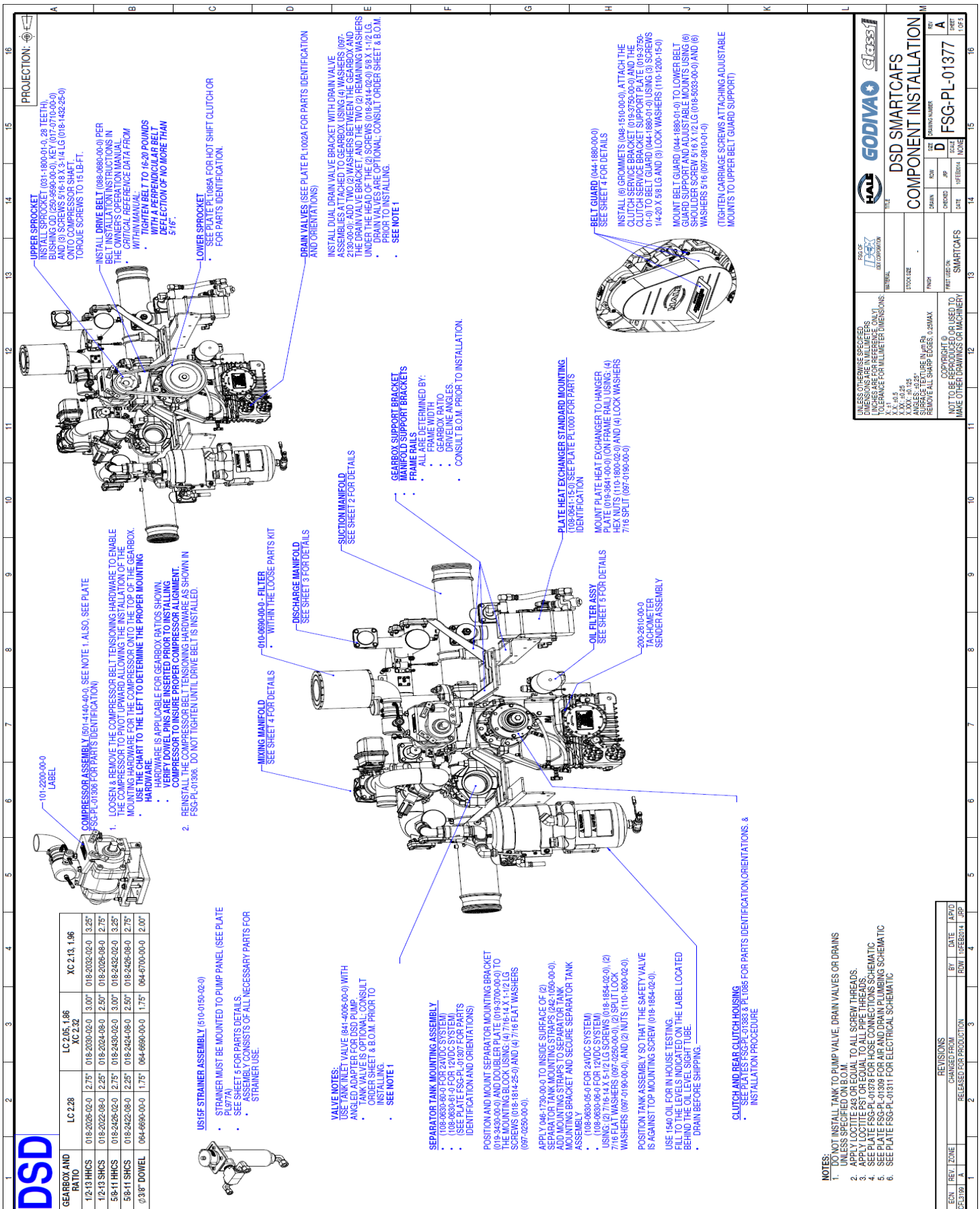

©HALE PRODUCTS, INC. Our policy is one of continuous development. We therefore reserve the right to amend specifications without notice or obligation.

PLATE FSG-PL-01375
HALE CAFS READY QMAX COMPONENT INSTALLATION
(P/N 562-0350-45-0 - 12VDC SYSTEM)

PROJECTION:

COMP LIFT PLATE KIT	519-00013-000		519-00013-020		519-00013-030	
GEARBOX AND RATIO	LC 2.28		LC 2.05, 1.86 XC 2.32		XC 2.13, 1.96	
1/2-13 HHCS	018-2026-02-0	2.75"	018-2030-02-0	3.00"	018-2032-02-0	3.25"
1/2-13 SHCS	018-2022-08-0	2.25"	018-2024-08-0	2.50"	018-2026-08-0	2.75"
5/8-11 HHCS	018-2426-02-0	2.75"	018-2430-02-0	3.00"	018-2432-02-0	3.25"
5/18-11 SHCS	018-2422-08-0	2.25"	018-2424-08-0	2.50"	018-2426-08-0	2.75"
∅3/8" DOWEL	064-6670-00-0	1.50"	064-6690-00-0	1.75"	064-6700-00-0	2.00"
LIFT PLATE	019-3740-00-0	0.75"	019-3740-02-0	1.00"	019-3740-03-0	1.25"

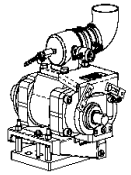

COMPRESSOR ASSEMBLY (501-4140-30-0, SEE NOTE 1. ALSO, SEE PLATE FSG-PL-01306 FOR PARTS IDENTIFICATION)

MOUNT COMPRESSOR LIFT PLATE AND COMPRESSOR MOUNTING BASE (019-3540-00-0) TO TOP OF GEARBOX USING APPROPRIATE CAFS COMPRESSOR LIFT PLATE KIT LISTED TO THE LEFT.

INSTALL COMPRESSOR ASSEMBLY (501-4140-30-0) TO MOUNTING BASE USING THE SHOULDER SCREWS AS SHOWN IN FSG-PL-01306.

ADD THE TENSIONING HARDWARE AS SHOWN IN FSG-PL-01306. DO NOT TIGHTEN UNTIL DRIVE BELT IS INSTALLED .

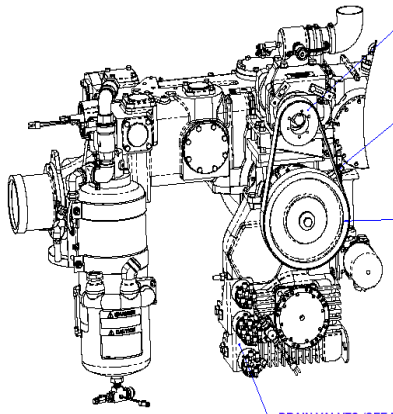

UPPER SPROCKET
INSTALL SPROCKET (031-1780-01-0, 32 TEETH), BUSHING QD (250-9590-00-0), KEY (017-0710-00-0) AND (3) SCREWS 5/16-18 X 3-1/4 LG (018-1432-25-0) ONTO COMPRESSOR SHAFT.
TORQUE SCREWS TO 15 LB-FT.

INSTALL **DRIVE BELT** (088-0730-00-0) PER BELT INSTALLATION INSTRUCTIONS IN THE OWNER'S OPERATION MANUAL.

TIGHTEN BELT TO 16-20 LBS. WITH A PERPENDICULAR BELT DEFLECTION OF NO MORE THAN 5/16 INCH.

LOWER SPROCKET (SEE PLATE PL1085 FOR HOT SHIFT CLUTCH OR FOR PARTS IDENTIFICATION)

INSTALL SPROCKET (031-1820-01-0, 71 TEETH) ONTO CLUTCH SHAFT USING KEY (017-0300-00-0). SHIM (048-0170-00-0) LOWER SPROCKET AS REQUIRED TO ALIGN WITH UPPER SPROCKET.

INSTALL WASHER (097-0830-01-0) AND SCREW 5/8-11 X 1-1/2 LG (018-2414-07-0). TORQUE SCREW TO 160 LB-FT.

DRAIN VALVES (SEE PLATE PL1002A FOR PARTS IDENTIFICATION AND ORIENTATIONS)

INSTALL DUAL DRAIN VALVE BRACKET WITH DRAIN VALVE ASSEMBLIES ATTACHED TO GEARBOX USING (4) WASHERS (097-2130-00-0): ADD TWO (2) WASHERS BETWEEN THE GEARBOX AND THE DRAIN VALVE BRACKET, AND THE TWO (2) REMAINING WASHERS UNDER THE HEAD OF THE (2) SCREWS (018-2414-02-0) 5/8 X 1-1/2 LG.

INSTALL DRAIN LINES BETWEEN PUMP BODY AND DRAIN VALVE ASSEMBLY USING 3/8 INCH YELLOW DOT AIR BRAKE TUBING. MOST DRAIN PORTS WILL REMAIN OPEN AND WILL BE USED FOR CUSTOMER INSTALLATION (MANIFOLD DRAINS, ETC.). SEE PL1010 FOR DETAILS.

SEPARATOR TANK MOUNTING ASSEMBLY 12V (108-0630-61-0) (SEE NOTE 1. ALSO, SEE PLATE FSG-PL-01307 FOR PARTS IDENTIFICATION AND ORIENTATIONS)

POSITION AND MOUNT SEPARATOR MOUNTING BRACKET (019-3430-00-0) AND DOUBLER PLATE (019-3700-00-0) TO THE MOUNTING BLOCK USING: (4) 7/16-14 X 1-1/2 LG SCREWS (018-1814-25-0) AND (4) 7/16 FLAT WASHERS (097-0250-00-0).

APPLY 046-1730-00-0 TO INSIDE SURFACE OF (2) SEPARATOR TANK MOUNTING STRAPS (242-1050-00-0). ADD MOUNTING STRAPS TO SEPARATOR TANK MOUNTING BRACKET AND SECURE SEPARATOR TANK ASSEMBLY (108-0630-06-0) USING: (2) 7/16-14 X 5-1/2 LG SCREWS (018-1854-02-0), (2) 7/16 FLAT WASHERS (097-0250-00-0), (2) SPLIT LOCKWASHERS (097-0190-00-0), AND (2) NUTS (110-1800-02-0).

POSITION TANK ASSEMBLY SO THAT THE SAFETY VALVE IS AGAINST TOP MOUNTING SCREW (018-1854-02-0).

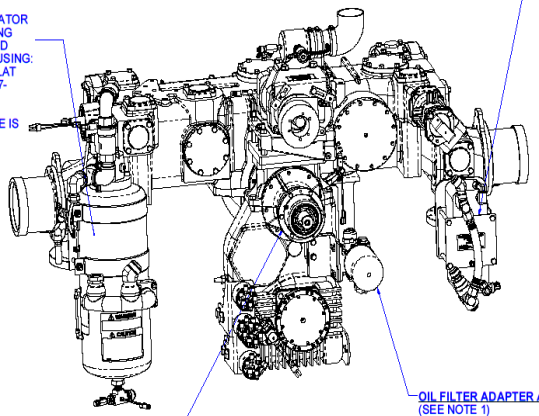

PLATE HEAT EXCHANGER STANDARD MOUNTING (108-0641-10-0) SEE NOTE 1. ALSO, SEE PLATE PL1000 FOR PARTS IDENTIFICATION

MOUNT PLATE HEAT EXCHANGER TO HANGER PLATE (019-3641-00-0) (ON PUMP BODY) USING: (4) HEX NUTS (110-1800-02-0) AND (4) LOCKWASHERS 7/16 SPLIT (097-0190-00-0)
(SEE PLATE PL1000 FOR HEAT EXCHANGER OPTIONAL MOUNTING LOCATION WHEN BOTTOM MOUNT MIV IS INSTALLED)

US15F STRAINER ASSEMBLY (510-0150-02-0)

STRAINER MUST BE MOUNTED TO PUMP PANEL (SEE PLATE PL977A) AND HAS THE FOLLOWING FITTING INSTALLED AND CONNECTED:
082-0553-02-0 ELBOW 3/4 MNPT X 1/2 TUBE COMPRESSION (X2)
082-0555-02-0 ELBOW 3/4 MNPT X 3/8 TUBE COMPRESSION
082-0523-02-0 TEE 3/4 FNPT EXTRUDED BRASS
082-0501-02-0 NIPPLE 3/4 NPT BRASS

ASSEMBLY CONSISTS OF ALL NECESSARY PARTS FOR STRAINER USE.

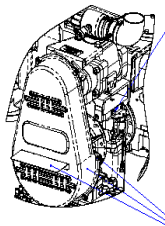

CLUTCH SOLENOID VALVE ASSEMBLY (12VDC)

SEE 538-1910-10-0 DRAWING FOR VALVE ASSEMBLY COMPONENTS AND FITTING ORIENTATIONS.

CONNECT 038-2030-00-0 FLOW CONTROL OUTLET FITTING TO CLUTCH AIR SUPPLY INLET FITTING USING 604-0079-02-0 GREEN DOT AIR BRAKE TUBING.

LEAVE SOLENOID VALVE ASSEMBLY AIR INLET FITTING OPEN - THIS IS TO BE CONNECTED BY OEM WHEN INSTALLED IN TRUCK.

CLUTCH AND REAR CLUTCH HOUSING (SEE NOTE 1. ALSO, SEE PLATE PL1085 & FSG-PL-01383 FOR PARTS IDENTIFICATION AND ORIENTATIONS)

INSTALL CLUTCH ASSEMBLY (505-0260-01-0) ONTO PUMP SHAFT USING KEY (017-0200-02-0), WASHER (097-2430-00-0) AND 7/16-14 SCREW (018-1810-02-0).

ROTATE PUMP SHAFT SO FITTING FOR AIR SUPPLY HOSE CAN BE INSTALLED INTO CLUTCH ASSEMBLY. INSTALL NIPPLE (082-0155-02-0), SEAL RING (040-1100-00-0), SPACER (159-5520-00-0), SHAFT COLLAR CLAMP (242-1130-00-0) AND ELBOW 1/8 NPT X TUBE COMPRESSION (082-0131-02-0).

INSTALL REAR CLUTCH HOUSING ASSEMBLY (562-0380-00-0) AND LOWER BELT GUARD SUPPORT (019-3580-00-0) USING (4) 5/16-18 X 1-1/2 LG SCREWS (018-1414-02-0) AND (2) 5/16-18 X 1-1/4 LG SCREWS (018-1412-02-0).

OIL FILTER ADAPTER AND OIL FILTER
(SEE NOTE 1)

INSTALL OIL FILTER ADAPTER (007-00021-000) ONTO OIL FILTER MOUNTING BRACKET (019-3560-00-0) USING (2) 3/8-16 X 1-1/4 LG SCREWS (018-1612-02-0), (2) 3/8 LOCK WASHERS (097-0140-01-0) AND (2) 3/8-16 NUTS (110-1600-02-0).

INSTALL (1)1-1/16-12 (W/ SEAL RING) X 1-5/16 JIC FITTING (082-3041-01-0) INTO OIL FILTER ADAPTER TOP OUTLET PORT.
INSTALL (1) 1-1/6-12 (W/ SEAL RING) X 1-5/16 JIC ELBOW (082-4028-08-0) INTO OIL FILTER ADAPTER BOTTOM INLET PORT.
INSTALL PLUGS INTO UNUSED ADAPTER PORTS.

INSTALL OIL FILTER (010-0650-01-0)

BELT GUARD (044-1880-10-0)

INSTALL (6) GROMMETS (048-1510-00-0), ATTACH THE CLUTCH SERVICE BRACKET (019-3750-00-0) AND THE CLUTCH SERVICE BRACKET SUPPORT PLATE (019-3750-01-0) TO BELT GUARD (044-1880-01-0) USING (3) SCREWS 1/4-20 X 5/8 LG AND (3) LOCK WASHERS (110-1200-15-0)

MOUNT BELT GUARD (044-1880-00-0) TO LOWER BELT GUARD SUPPORT AND ADJUSTABLE MOUNTS USING (6) SHOULDER SCREW 5/16 X 1/2 LG (018-5033-00-0) AND (6) WASHERS 5/16 (097-0810-01-0)

(TIGHTEN CARRIAGE SCREWS ATTACHING ADJUSTABLE MOUNTS TO UPPER BELT GUARD SUPPORT)

NOTES:
1. ENSURE PUMP HAS BRACKETS AND TANK PAD INSTALLED PER PL987 PRIOR TO ADDING CAFS READY COMPONENTS. DO NOT INSTALL TANK TO PUMP VALVE OR TPM SYSTEM UNLESS SPECIFIED IN PUMP BOM. TPM SYSTEM SHOWN FOR REFERENCE ONLY.
2. APPLY LOCTITE 246 OR EQUAL TO ALL SCREW THREADS.
3. APPLY LOCTITE PST OR EQUAL TO ALL PIPE THREADS.
4. SEE PLATE FSG-PL-01308 FOR HOSE CONNECTIONS SCHEMATIC.

REVISIONS						
ECN	REV.	ZONE	CHANGED FROM	BY	DATE	APVD
	1		PRELIMINARY RELEASE	JRP	02FEB2014	MAL
	2		UPDATED VIEWS & NOTES	JRP	25MAR2014	MAL

UNLESS OTHERWISE SPECIFIED DIMENSIONS ARE IN MILLIMETERS [INCHES ARE FOR REFERENCE, ONLY] TOLERANCE FOR MILLIMETER DIMENSIONS:
X: ±1
X.X: ±0.5
X.XX: ±0.25
X.XXX: ±0.125
ANGLES: ±0.25°
SURFACE TEXTURE IN µm Ra
REMOVE ALL SHARP EDGES, 0.25MAX

COPYRIGHT ©
NOT TO BE REPRODUCED OR USED TO MAKE OTHER DRAWINGS OR MACHINERY

FSG OF IDEX CORPORATION

MATERIAL

MADE FROM

FINISH

PROJECT: CAFS READY

HALE GODIVA Class 1

TITLE: CAFS READY QMAX COMPONENT INSTALLATION

DRAWN	JRP	SIZE D	DRAWING NUMBER FSG-PL-01375
APPROVED	MAL	SCALE NONE	REV 2
DATE	02FEB2014		SHEET 1 OF 1

©HALE PRODUCTS, INC. Our policy is one of continuous development. We therefore reserve the right to amend specifications without notice or obligation.

SMARTCAFS200 WIRING HARNESS

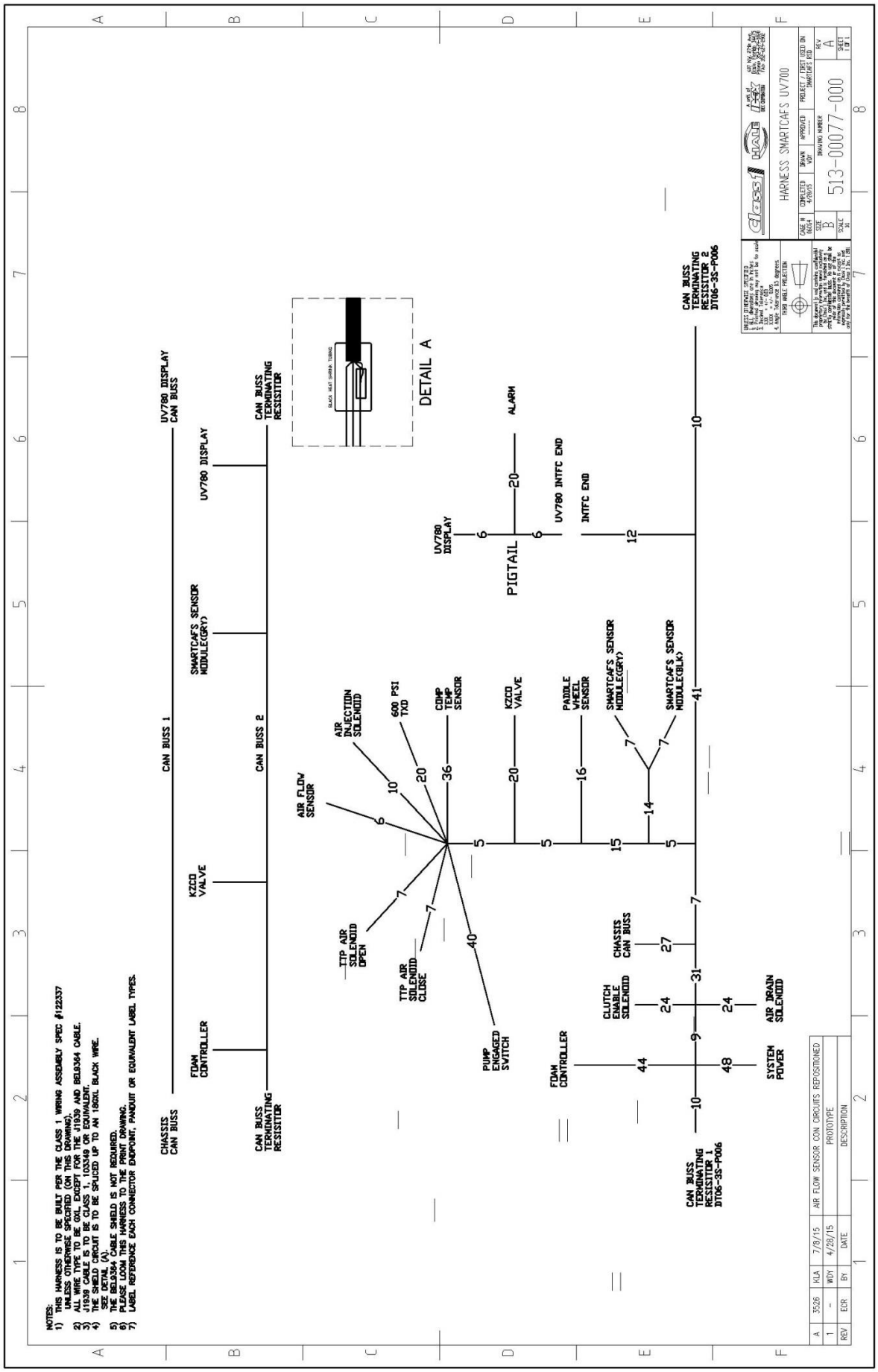

©HALE PRODUCTS, INC. Our policy is one of continuous development. We therefore reserve the right to amend specifications without notice or obligation.

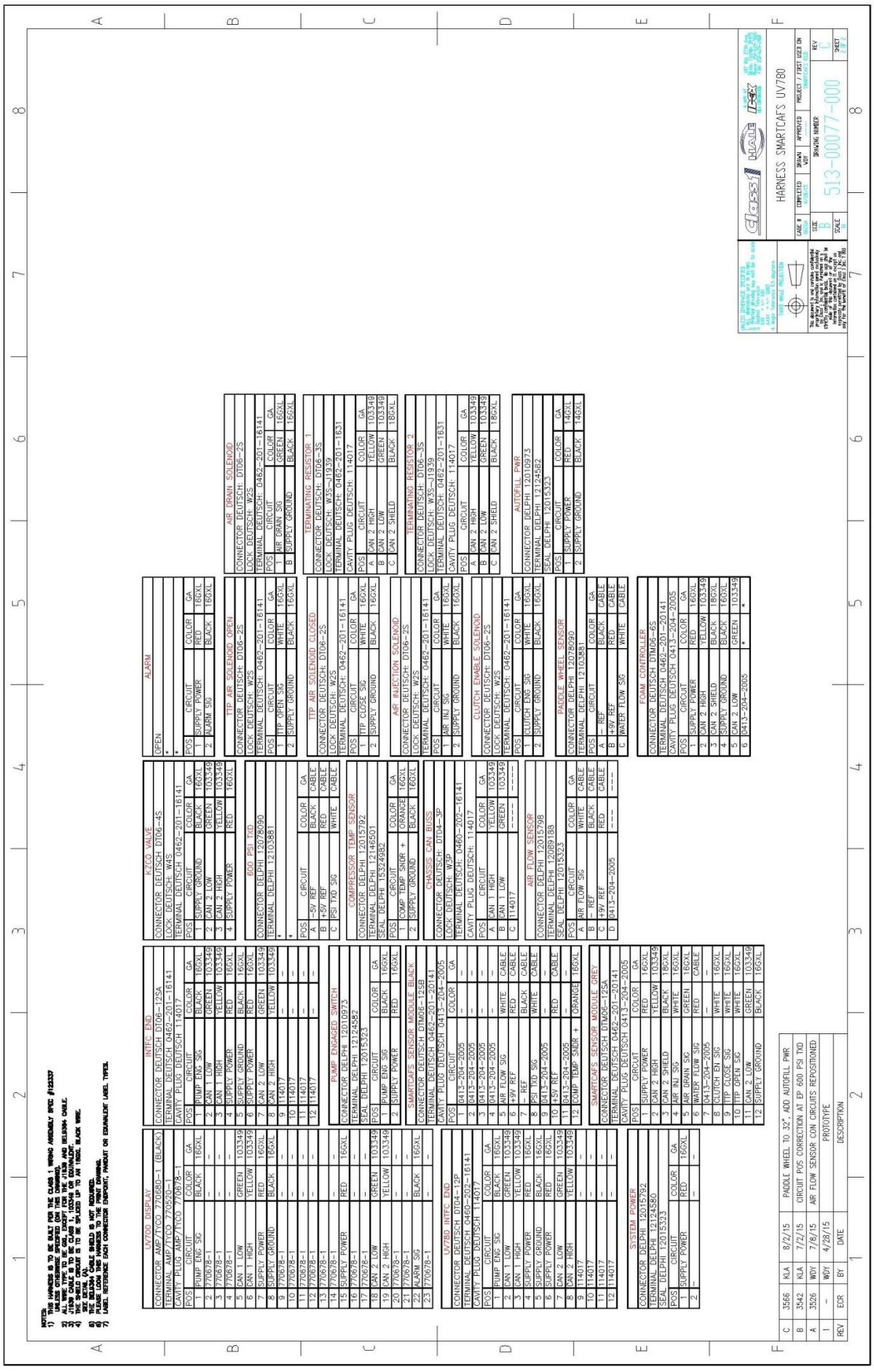

©HALE PRODUCTS, INC. Our policy is one of continuous development. We therefore reserve the right to amend specifications without notice or obligation.

THERMAL RELIEF VALVE

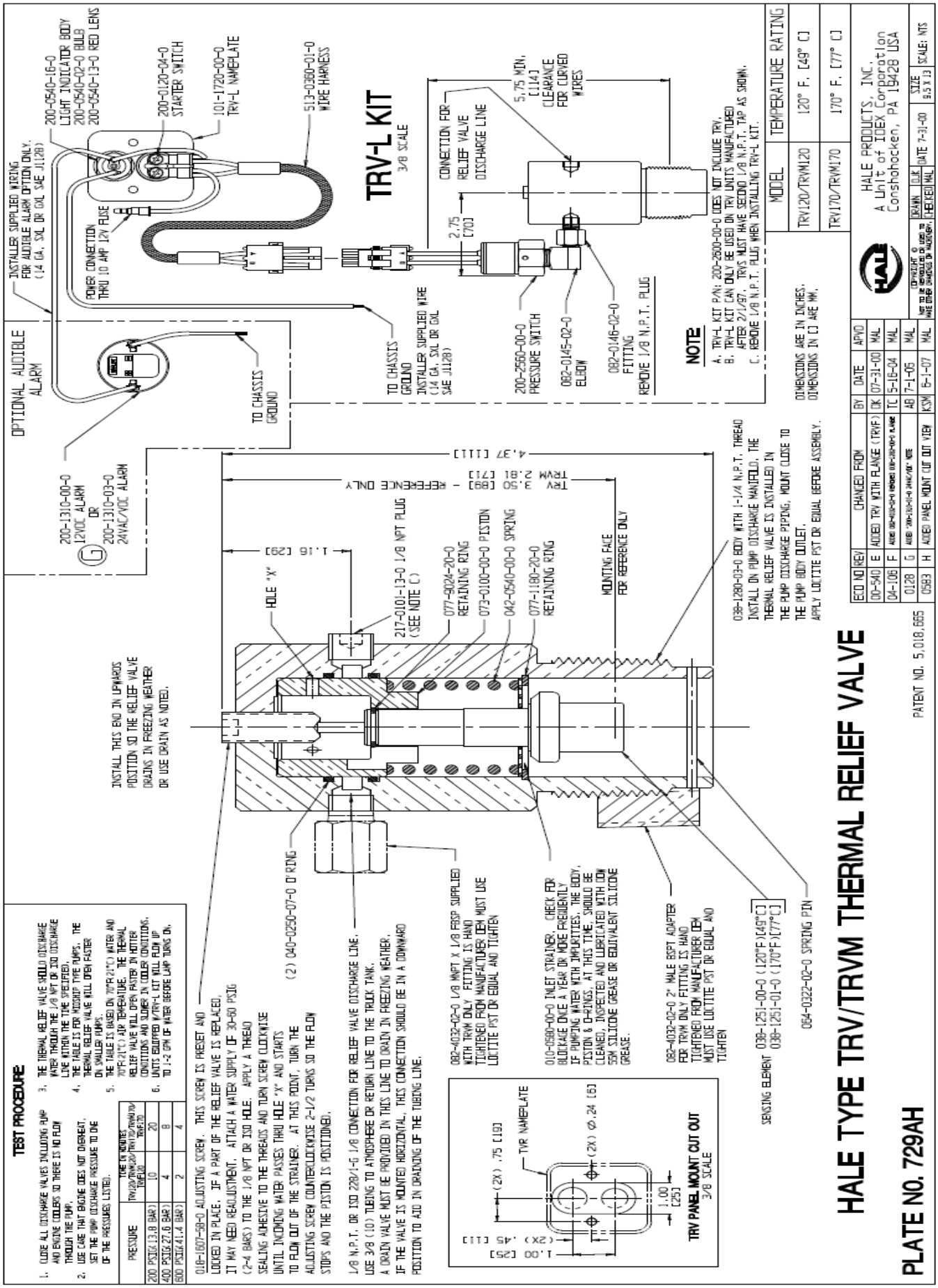

©HALE PRODUCTS, INC. Our policy is one of continuous development. We therefore reserve the right to amend specifications without notice or obligation.

PARTS LIST – SUCTION MANIFOLD

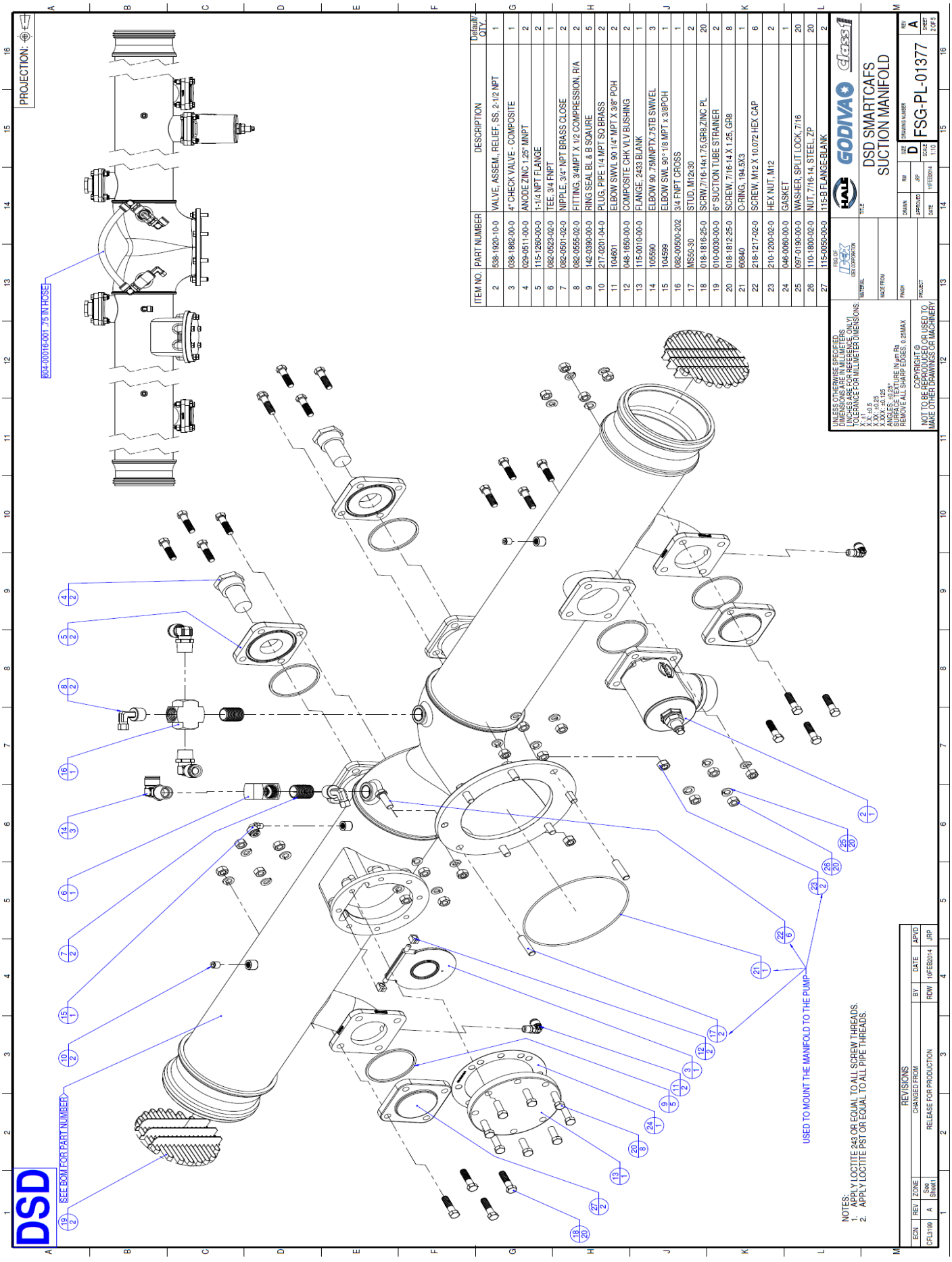

ITEM NO.	PART NUMBER	DESCRIPTION	Default QTY.
2	538-1920-10-0	VALVE, ASSEM., RELIEF, SS, 2-1/2 NPT	1
3	038-1862-00-0	4" CHECK VALVE - COMPOSITE	1
4	029-0511-00-0	ANODE ZINC 1.25" MNPT	2
5	115-1260-00-0	1-1/4 NPT FLANGE	2
6	082-0523-02-0	TEE, 3/4 FNPT	1
7	082-0501-02-0	NIPPLE, 3/4" NPT BRASS CLOSE	2
8	082-0555-02-0	FITTING, 3/4MPT X 1/2 COMPRESSION, R/A	2
9	142-0390-00-0	RING SEAL BL & B SQAURE	5
10	217-0201-04-0	PLUG, PIPE 1/4 MPT SQ BRASS	2
11	104601	ELBOW SWVL 90 1/4" MPT X 3/8" POH	2
12	048-1650-00-0	COMPOSITE CHK VLV BUSHING	2
13	115-0010-00-0	FLANGE, 2433 BLANK	1
14	105590	ELBOW 90, 75MNPTX,75TB SWIVEL	3
15	104599	ELBOW SWL 90° 1/8 MPT x 3/8POH	1
16	082-00500-202	3/4 FNPT CROSS	1
17	MS50-30	STUD, M12x30	2
18	018-1816-25-0	SCRW,7/16-14x1.75,GR8,ZINC PL	20
19	010-0030-00-0	6" SUCTION TUBE STRAINER	2
20	018-1812-25-0	SCREW, 7/16-14 X 1.25, GR8	8
21	60840	O-RING, 194.5X3	1
22	218-1217-02-0	SCREW, M12 X 10.072 HEX CAP	6
23	210-1200-02-0	HEX NUT, M12	2
24	046-0060-00-0	GASKET	1
25	097-0190-00-0	WASHER, SPLIT LOCK, 7/16	20
26	110-1800-02-0	NUT, 7/16-14, STEEL, ZP	20
27	115-0059-00-0	115-B FLANGE-BLANK	2

©HALE PRODUCTS, INC. Our policy is one of continuous development. We therefore reserve the right to amend specifications without notice or obligation.

PARTS LIST – DISCHARGE MANIFOLD

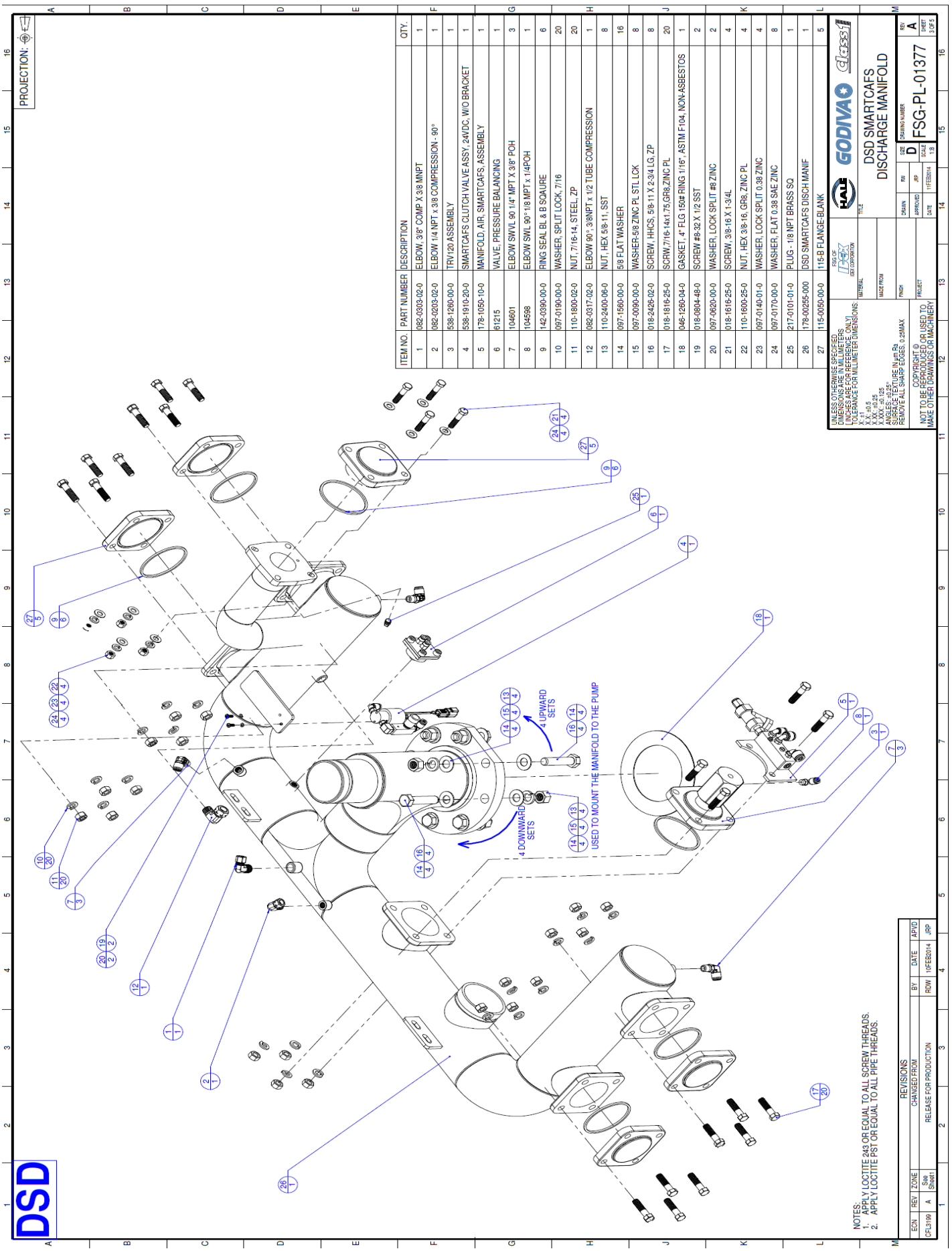

ITEM NO.	PART NUMBER	DESCRIPTION	QTY.
1	082-0303-02-0	ELBOW, 3/8" COMP X 3/8 MNPT	1
2	082-0203-02-0	ELBOW 1/4 NPT x 3/8 COMPRESSION - 90°	1
3	538-1260-00-0	TRV120 ASSEMBLY	1
4	538-1910-20-0	SMARTCAFS CLUTCH VALVE ASSY, 24VDC, W/O BRACKET	1
5	178-1050-10-0	MANIFOLD, AIR, SMARTCAFS, ASSEMBLY	1
6	61215	VALVE, PRESSURE BALANCING	1
7	104601	ELBOW SWVL 90 1/4" MPT X 3/8" POH	3
8	104598	ELBOW SWL 90° 1/8 MPT x 1/4POH	1
9	142-0390-00-0	RING SEAL BL & B SQAURE	6
10	097-0190-00-0	WASHER, SPLIT LOCK, 7/16	20
11	110-1800-02-0	NUT, 7/16-14, STEEL, ZP	20
12	082-0317-02-0	ELBOW 90°, 3/8NPT x 1/2 TUBE COMPRESSION	1
13	110-2400-08-0	NUT, HEX 5/8-11, SST	8
14	097-1560-00-0	5/8 FLAT WASHER	16
15	097-0090-00-0	WASHER-5/8 ZINC PL STL LCK	8
16	018-2426-02-0	SCREW, HHCS, 5/8-11 X 2-3/4 LG, ZP	8
17	018-1816-25-0	SCRW,7/16-14x1.75,GR8,ZINC PL	20
18	046-1260-04-0	GASKET, 4" FLG 150# RING 1/16", ASTM F104, NON-ASBESTOS	1
19	018-0804-48-0	SCREW #8-32 X 1/2 SST	2
20	097-0620-00-0	WASHER, LOCK SPLIT #8 ZINC	2
21	018-1616-25-0	SCREW, 3/8-16 X 1-3/4L	4
22	110-1600-25-0	NUT, HEX 3/8-16, GR8, ZINC PL	4
23	097-0140-01-0	WASHER, LOCK SPLIT, 0.38 ZINC	4
24	097-0170-00-0	WASHER, FLAT 0.38 SAE ZINC	8
25	217-0101-01-0	PLUG - 1/8 NPT BRASS SQ	1
26	178-00255-000	DSD SMARTCAFS DISCH MANIF	1
27	115-0050-00-0	115-B FLANGE-BLANK	5

©HALE PRODUCTS, INC. Our policy is one of continuous development. We therefore reserve the right to amend specifications without notice or obligation.

PARTS LIST – BELT GUARD & CAFS MIXING MANIFOLD

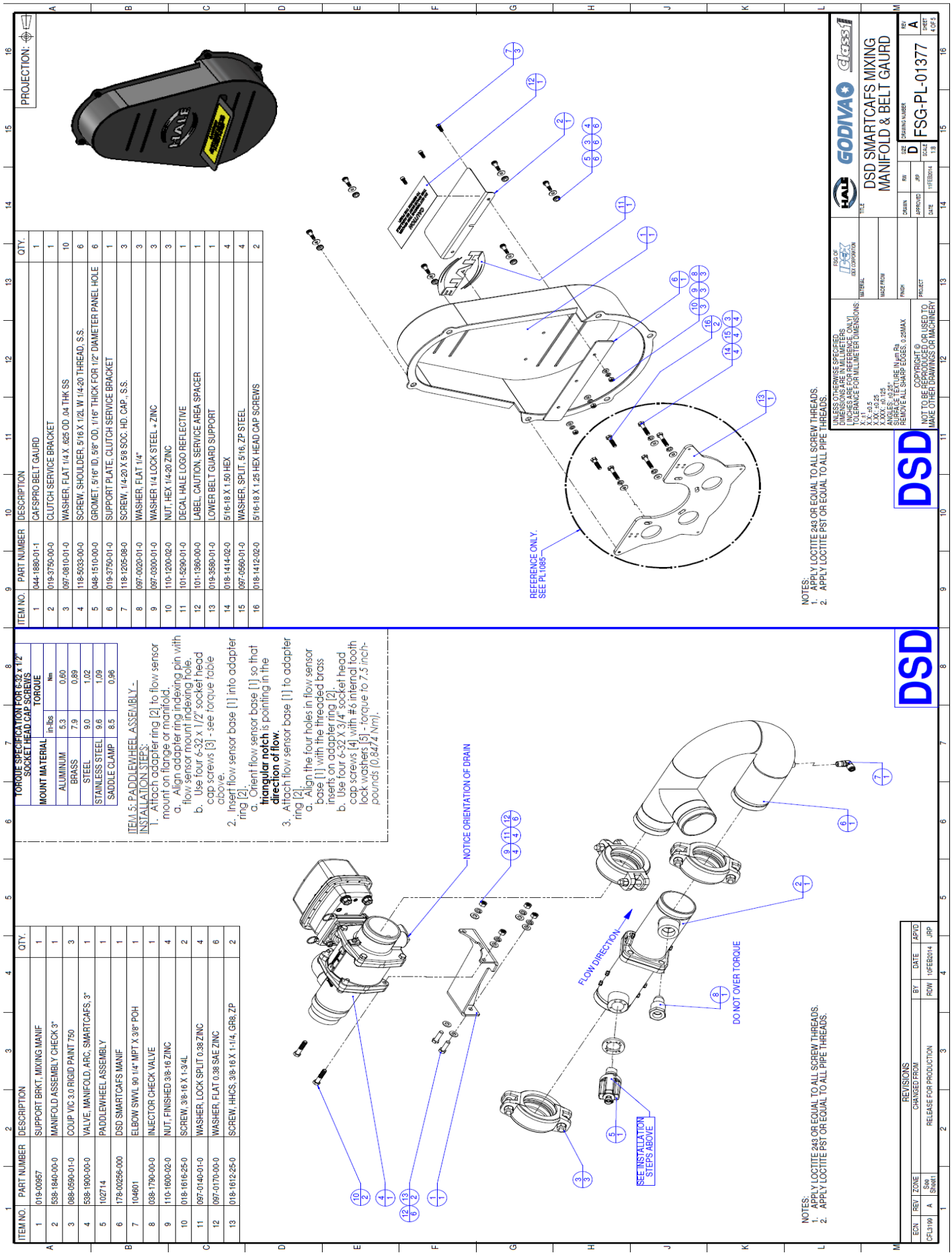

©HALE PRODUCTS, INC. Our policy is one of continuous development. We therefore reserve the right to amend specifications without notice or obligation.

PARTS LIST – OIL FILTER & STRAINER

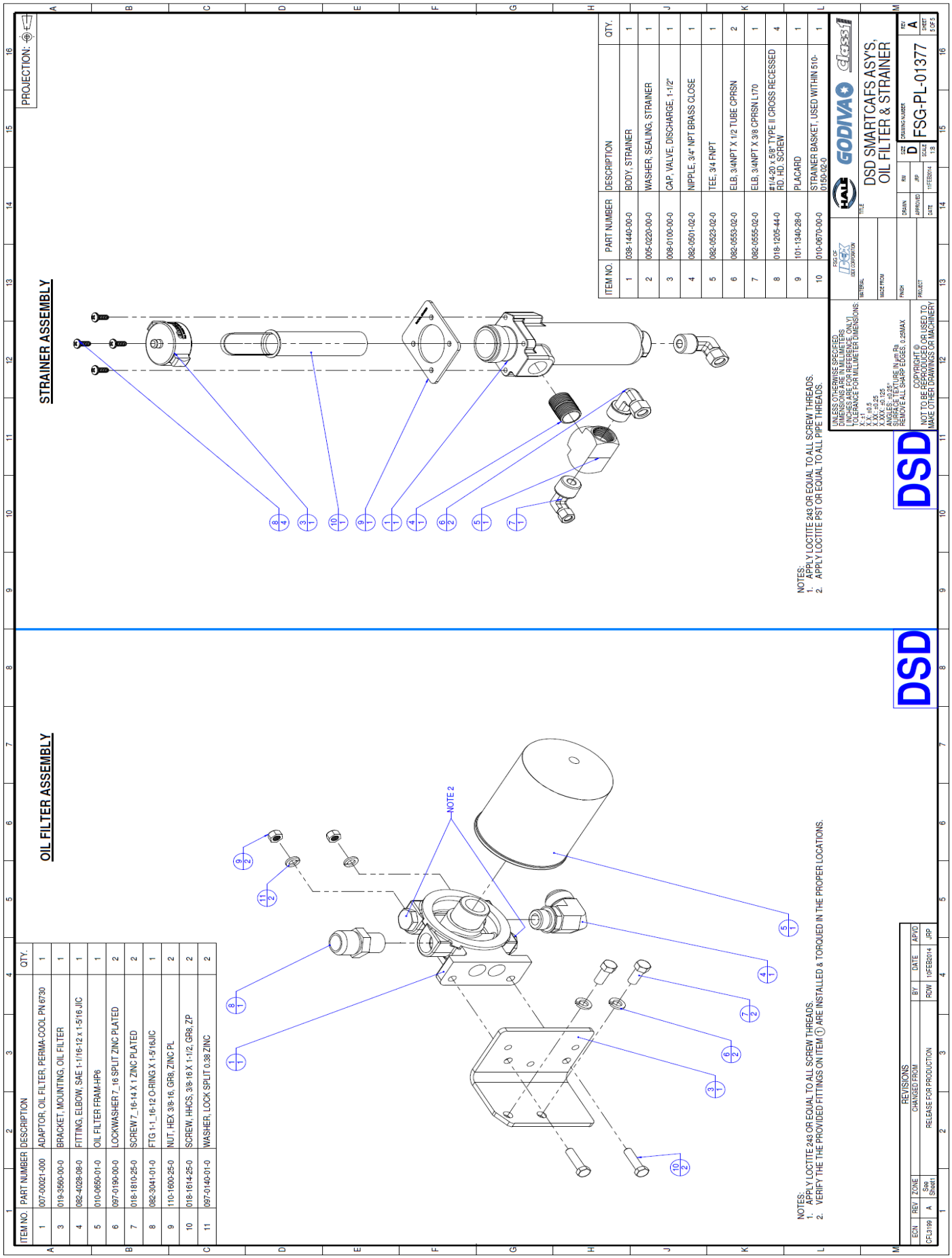

ITEM NO.	PART NUMBER	DESCRIPTION	QTY.
1	038-1440-00-0	BODY, STRAINER	1
2	005-0220-00-0	WASHER, SEALING, STRAINER	1
3	008-0100-00-0	CAP, VALVE, DISCHARGE, 1-1/2"	1
4	082-0501-02-0	NIPPLE, 3/4" NPT BRASS CLOSE	1
5	082-0523-02-0	TEE, 3/4 FNPT	1
6	082-0553-02-0	ELB, 3/4NPT X 1/2 TUBE CPRSN	2
7	082-0555-02-0	ELB, 3/4NPT X 3/8 CPRSN L170	1
8	018-1205-44-0	#1/4-20 x 5/8" TYPE II CROSS RECESSED RD. HD. SCREW	4
9	101-1340-28-0	PLACARD	1
10	010-0670-00-0	STRAINER BASKET, USED WITHIN 510-0150-02-0	1

ITEM NO.	PART NUMBER	DESCRIPTION	QTY.
1	007-00021-000	ADAPTOR, OIL FILTER, PERMA-COOL PN 6730	1
3	019-3560-00-0	BRACKET, MOUNTING, OIL FILTER	1
4	082-4028-08-0	FITTING, ELBOW, SAE 1-1/16-12 x 1-5/16 JIC	1
5	010-0650-01-0	OIL FILTER FRAM-HP6	1
6	097-0190-00-0	LOCKWASHER 7_16 SPLIT ZINC PLATED	2
7	018-1810-25-0	SCREW 7_16-14 X 1 ZINC PLATED	2
8	082-3041-01-0	FTG 1-1_16-12 O-RING X 1-5/16JIC	1
9	110-1600-25-0	NUT, HEX 3/8-16, GR8, ZINC PL	2
10	018-1614-25-0	SCREW, HHCS, 3/8-16 X 1-1/2, GR8, ZP	2
11	097-0140-01-0	WASHER, LOCK SPLIT 0.38 ZINC	2

ECN	REV	ZONE	REVISIONS	BY	DATE	APVD
CFL3199	A	See Sheet1	RELEASE FOR PRODUCTION	RDW	10FEB2014	JRP

©HALE PRODUCTS, INC. Our policy is one of continuous development. We therefore reserve the right to amend specifications without notice or obligation.

PARTS LIST – COMPRESSOR

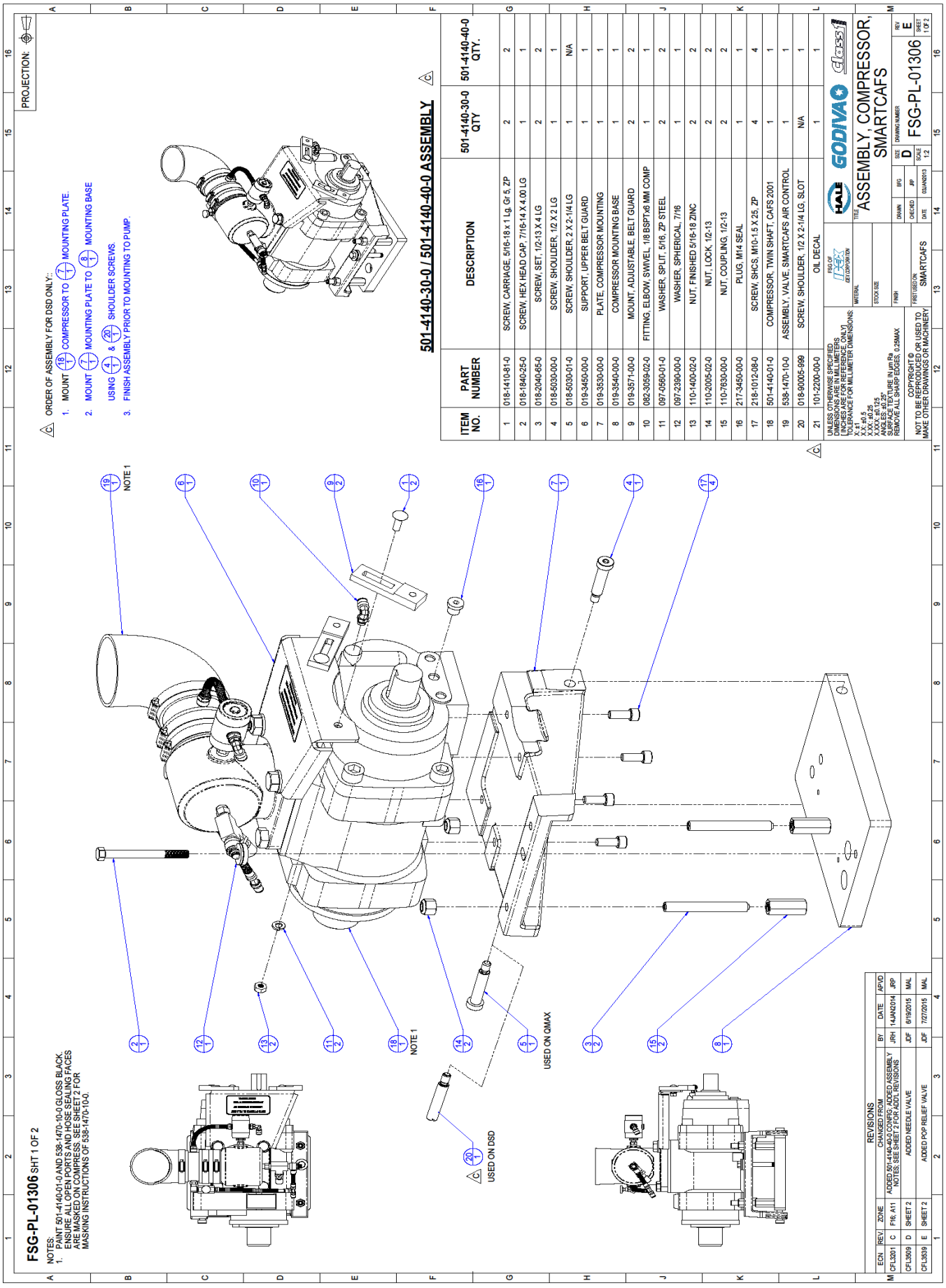

©HALE PRODUCTS, INC. Our policy is one of continuous development. We therefore reserve the right to amend specifications without notice or obligation.

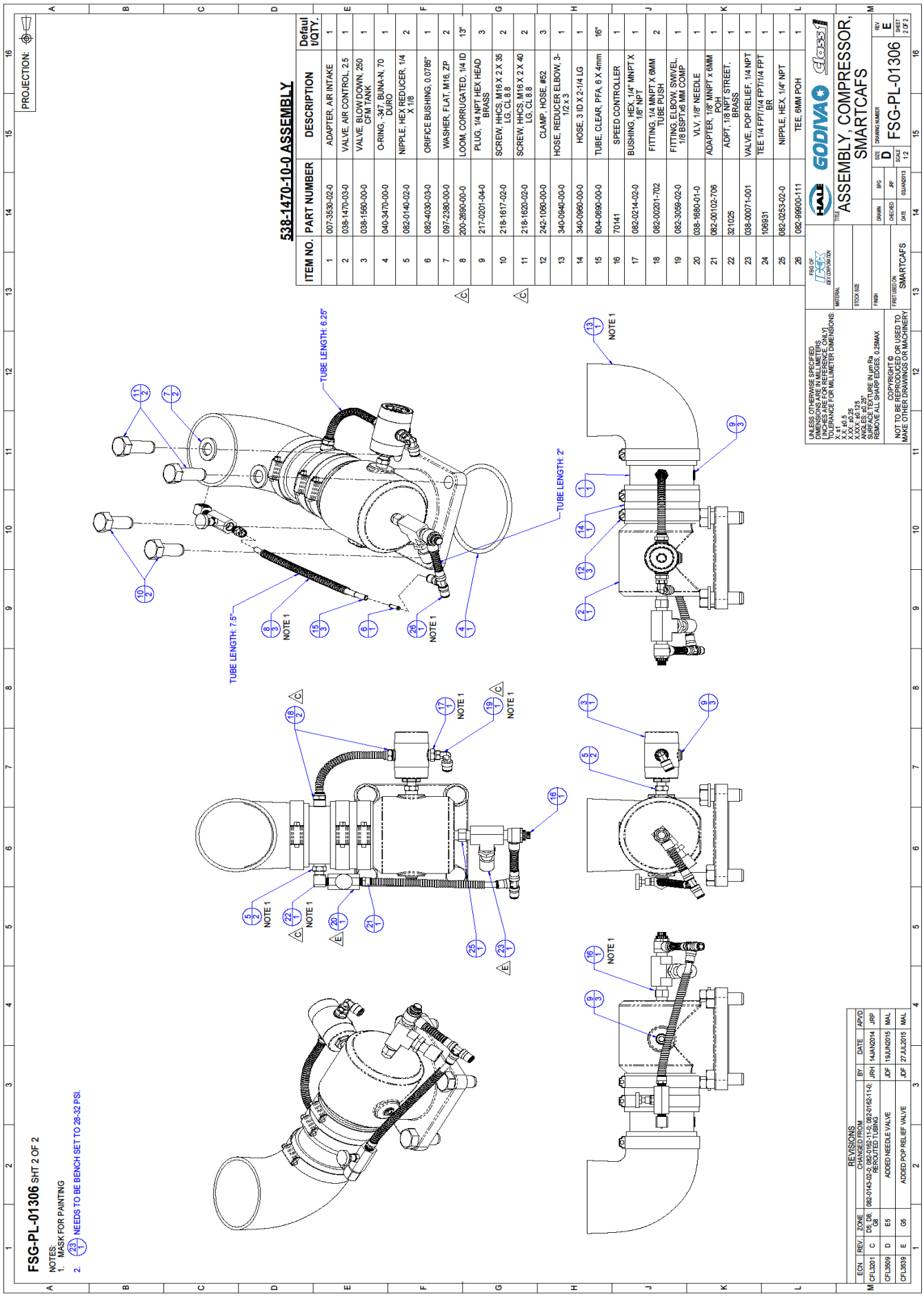

©HALE PRODUCTS, INC. Our policy is one of continuous development. We therefore reserve the right to amend specifications without notice or obligation.

PARTS LIST – SEPARATOR, OIL RESERVOIR

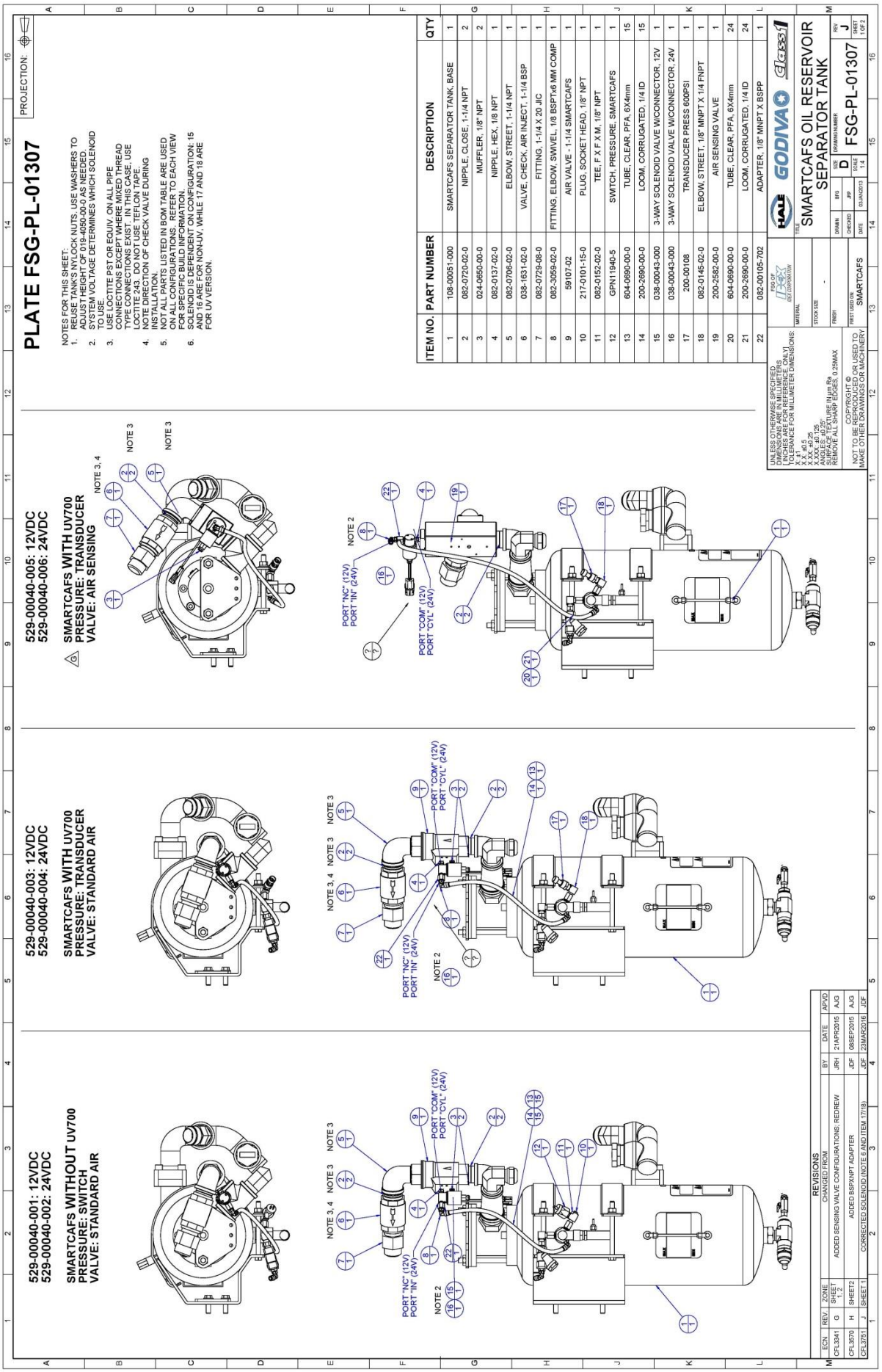

©HALE PRODUCTS, INC. Our policy is one of continuous development. We therefore reserve the right to amend specifications without notice or obligation.

PLATE FSG-PL-01307

P/N: 108-00051-000

PROJECTION:

NOTES FOR THIS SHEET:
1. USE LOCTITE PST OR EQUIV ON ALL PIPE CONNECTIONS EXCEPT WHERE MIXED THREAD TYPE CONNECTIONS EXIST. IN THIS CASE, USE LOCTITE 243. DO NOT USE TEFLON TAPE.
2. USE CAUTION WHEN APPLYING DECALS. WHEN APPLYING OIL LEVEL MIN/MAX DECAL, POSITION THE MINIMUM LINE SO THAT MIN OIL LEVEL IS IN LINE WITH THE TOP OF THE OIL LEVEL TUBE COMPRESSION NUT.

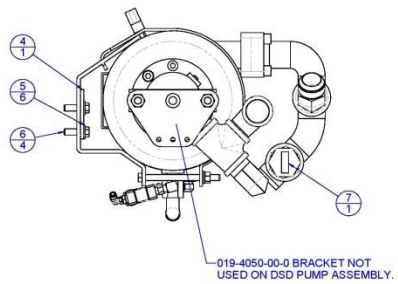

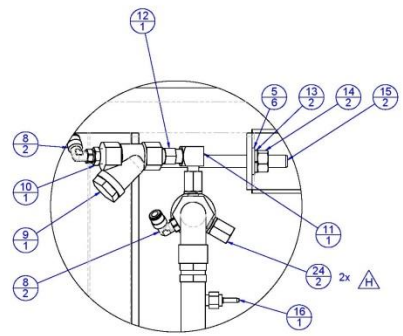

DETAIL B
SCALE 1 : 2

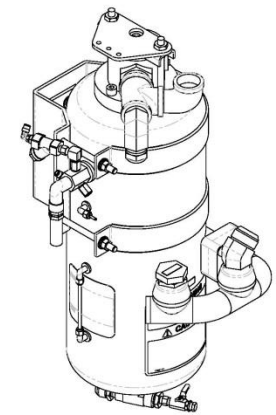

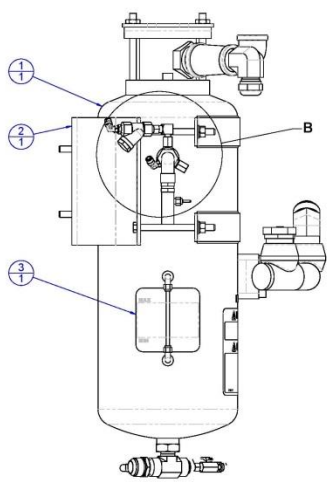

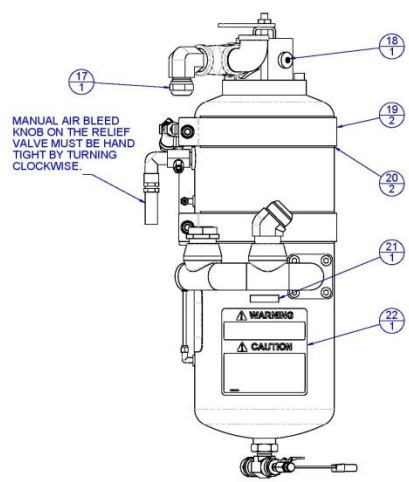

ITEM NO.	PART NUMBER	DESCRIPTION	QTY.
1	108-0630-00-0	TANK, SEPARATOR, OIL RESERVOIR	1
2	019-3430-00-0	BRACKET, SEPARATOR TANK MTG.	1
3	101-2360-00-0	DECAL, OIL LEVEL, CAFS SEP. TANK	1
4	019-3700-00-0	PLATE, DOUBLER, SEPARATOR TANK	1
5	097-0250-00-0	ZEYC-396 WASHER	6
6	018-1814-25-0	SCREW, 7/16-14 X 1-1/2, GR 8	4
7	101-0150-00-0	DECAL, OIL FILL	1
8	082-3059-02-0	FITTING, ELBOW, SWIVEL, 1/8 BSPTx6 MM COMP	2
9	010-0710-01-0	STRAINER, 1/4" WYE	1
10	082-0214-02-0	BUSHING, HEX, 1/4" MNPT X 1/8" NPT	1
11	082-0145-02-0	ELBOW, STREET, 1/8" MNPT X 1/4 FNPT	1
12	082-0253-02-0	NIPPLE, HEX, 1/4" NPT	1
13	097-0190-00-0	WASHER, SPLIT LOCK, 7/16	2
14	110-1800-02-0	NUT, 7/16-14, STEEL, ZP	2
15	018-1844-02-0	SCREW, HEX HEAD, 7/16-14 X 5-1/2, ZP	2
16	082-4030-03-0	ORIFICE BUSHING, 0.0785"	1
17	082-0601-08-0	CAP, -16 JIC	1
18	217-0101-15-0	PLUG, SOCKET HEAD, 1/8" NPT	1
19	242-1050-00-0	STRAP, MTG. SEPARATOR TANK	2
20	046-1730-00-0	RUBBER, EPDM, 1/32" THK X 2" WIDE	2
21	101-2040-00-0	LABEL, METRIC SUBASSEMBLY	1
22	101-1410-01-0	DECAL, RESERVOIR WARNING	1
24	082-00104-708	ADAPTER, 1/8" FNPT X BSPP	2

REVISIONS

ECN	REV	ZONE	CHANGED FROM	BY	DATE	APVD
CFL3341	G	SHEET 1, 2	ADDED AIR SENSING VALVE CONFIGURATION, REDREW	JRH	21APR2015	AJG
CFL3570	H	D8	ADDED BSPXNPT ADAPTER	JDF	08SEP2015	NR
CFL3751	J	SHEET 1	CORRECTED SOLENOID (NOTE 6 AND ITEM 17/18)	JDF	23MAR2016	JDF

UNLESS OTHERWISE SPECIFIED DIMENSIONS ARE IN MILLIMETERS [INCHES ARE FOR REFERENCE, ONLY] TOLERANCE FOR MILLIMETER DIMENSIONS:
X: ±1
X.X: ±0.5
X.XX: ±0.25
X.XXX: ±0.125
ANGLES: ±0.25°
SURFACE TEXTURE IN µm Ra
REMOVE ALL SHARP EDGES, 0.25MAX

COPYRIGHT ©
NOT TO BE REPRODUCED OR USED TO MAKE OTHER DRAWINGS OR MACHINERY

FSG OF IDEX CORPORATION

MATERIAL: Material <not specified>
STOCK SIZE: -
FINISH:
FIRST USED ON: SMARTCAFS

HALE GODIVA Class1

TITLE: SMARTCAFS SEPARATOR TANK, BASE

DRAWN	BFG	SIZE	DRAWING NUMBER	REV
CHECKED	JRP	D	FSG-PL-01307	J
DATE	03JAN2013	SCALE 1:4		SHEET 2 OF 2

©HALE PRODUCTS, INC. Our policy is one of continuous development. We therefore reserve the right to amend specifications without notice or obligation.

QUICK REFERENCE GUIDE/TROUBLESHOOTING

AIR INJECTION/CONTROL

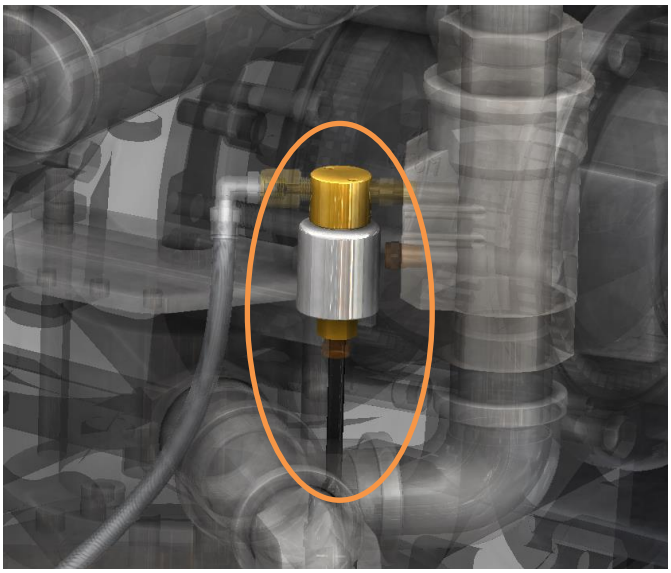

PART NUMBER	**12V:** 038-00043-010 **24V:** 038-00043-000
DESCRIPTION	Air Inject Solenoid
OPERATION	Controls the air supply to the air inject valve. When the air is supplied to the air valve it allows air to be injected into the system.

POSSIBLE FAULT	• No Air Injection
	  ○ No power being supplied to solenoid.
	  ○ Solenoid is clogged.
	  ○ Solenoid has failed.

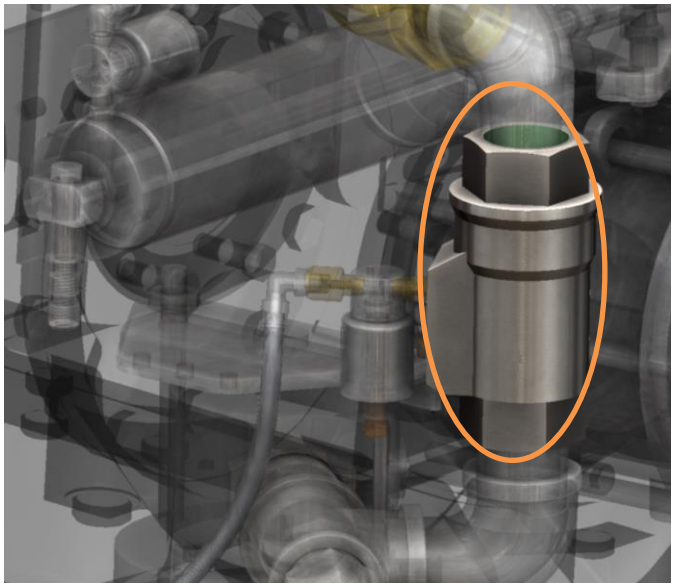

PART NUMBER	**59107-02**
DESCRIPTION	Air Inject Valve
OPERATION	Controls the air injection into the water/foam manifold. When this receives air from the air solenoid it has a plunger that lifts from its seat to allow air to pass through.

POSSIBLE FAULT	• Not opening
	  ○ No air from solenoid.
	  ○ Air port from solenoid is clogged.
	• Not closing
	  ○ Valve seat is dirty.
	  ○ Valve seal has failed.

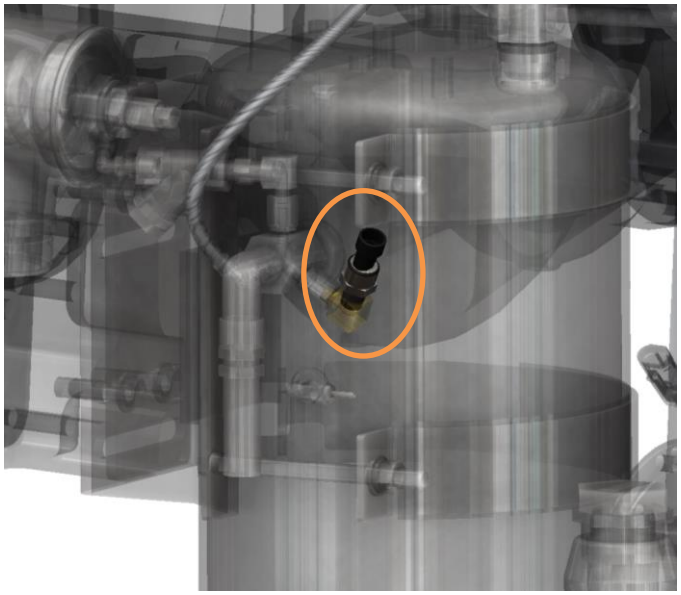

PART NUMBER	**200-00108**
DESCRIPTION	Air Pressure Detect Transducer
OPERATION	This transducer reads air pressure. Once this transducer senses 5 psi it disables the clutch from engaging. This also controls the interlock for air injection. It also provides the air pressure readout on the display.

POSSIBLE FAULT	• Air is not injecting
	  ○ Transducer not detecting air pressure.
	  ○ No power to transducer.
	  ○ Transducer has failed.
	• Clutch is not engaging
	  ○ Air pressure> 5 psi detected.
	  ○ No power to transducer.
	  ○ Transducer has failed.

©HALE PRODUCTS, INC. Our policy is one of continuous development. We therefore reserve the right to amend specifications without notice or obligation.

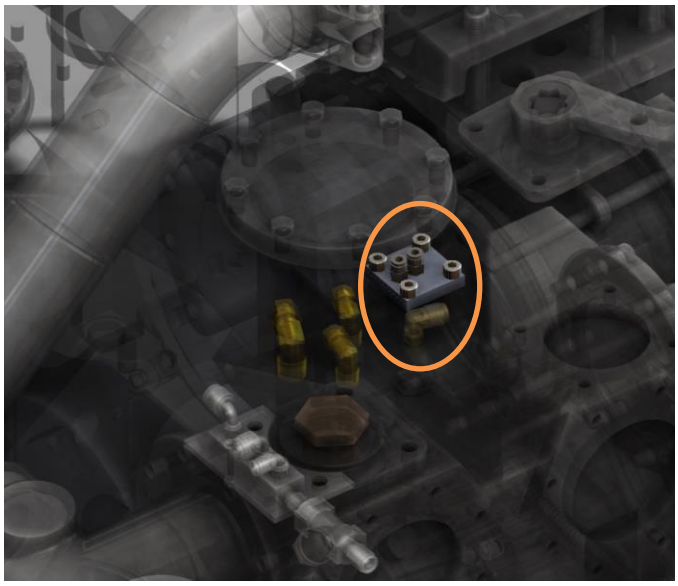

PART NUMBER	61215
DESCRIPTION	Air Balance Valve
OPERATION	Controls the air intake valve for the compressor in order to match the air to the water pressure. Air is injected from the outside port onto a plunger which is raised and lowered by the water pressure from the other side to choke and open the air intake for the compressor.

POSSIBLE FAULT	• Air is not matching
	  ○ O-ring needs to be greased
	  ○ Water inlet has been crushed preventing the plunger from moving properly.
	
	See "**CAFS - Setting the Air Balance control Valves**" on page **83**.

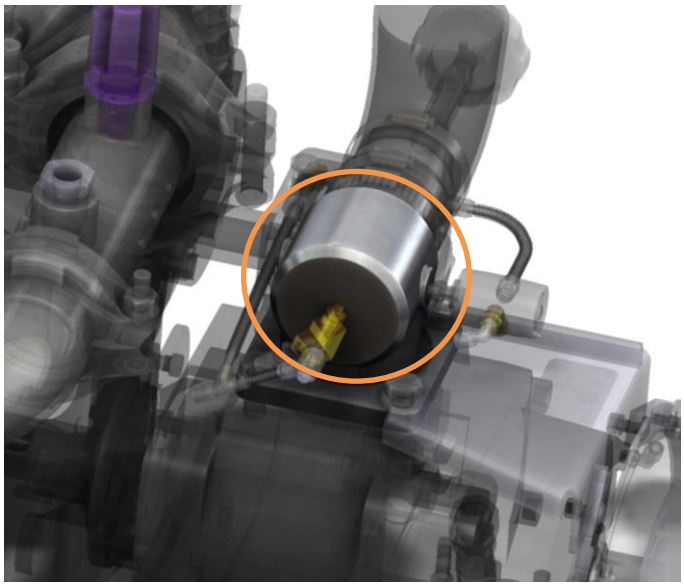

PART NUMBER	038-1470-03-0
DESCRIPTION	Air Intake Valve
OPERATION	Controls the amount of air going into the compressor. This in turn controls the amount of air being injected into the system. The farther open the plunger the more air being injected. The plunger is balanced

POSSIBLE FAULT	• No air injection
	  ○ Too much air pressure from the control side of the air intake valve from the air balance valve
	• Pressure match isn't smooth
	  ○ Plunger is sticking
	• Pressure isn't matching
	  ○ See instructions on page **83**.
	• Air leaks
	  ○ O-ring/Seal is bad
	  ○ Bolts to compressor are loose.

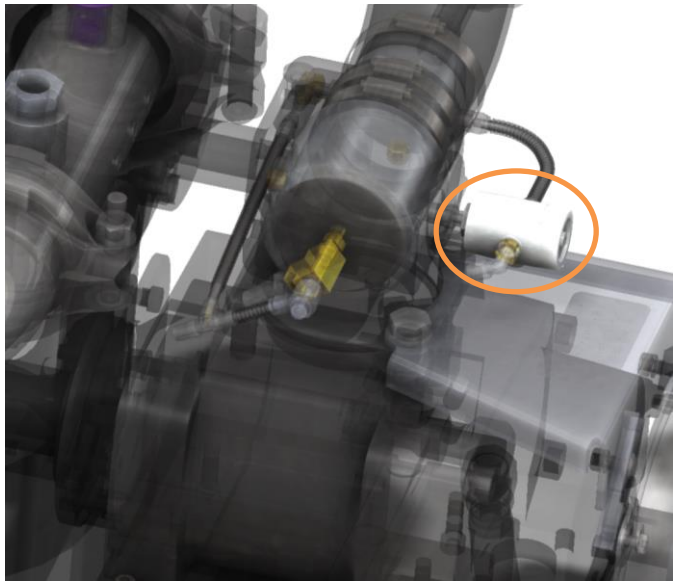

PART NUMBER	038-1560-00-0
DESCRIPTION	Blow Down Valve
OPERATION	Releases built up pressure in air system. Air pressure is supplied from the oil separator and the air intake. If they don't match the valve opens connection from the oil separator to atmosphere

POSSIBLE FAULT	• Air leaks
	  ○ Valve is bad
	  ○ Fittings are loose

©HALE PRODUCTS, INC. Our policy is one of continuous development. We therefore reserve the right to amend specifications without notice or obligation.

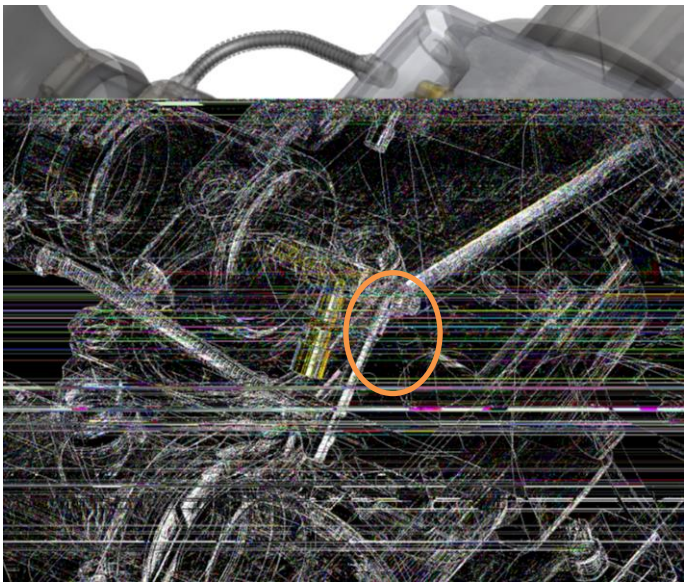

PART NUMBER	038-00071-001
DESCRIPTION	Air Relief Valve
OPERATION	This valve relieves pressure from the control side of the air intake valve. Any pressure above the required pressure to close the air intake valve will be released. This improves the tracking speed for the pressure match, especially when reducing water pressure.

POSSIBLE FAULT	• Pressure isn't matching
	  ○ Relief pressure is set too low. Tighten to increase relief pressure.
	• Air leaks
	  ○ O-ring/Seal is bad

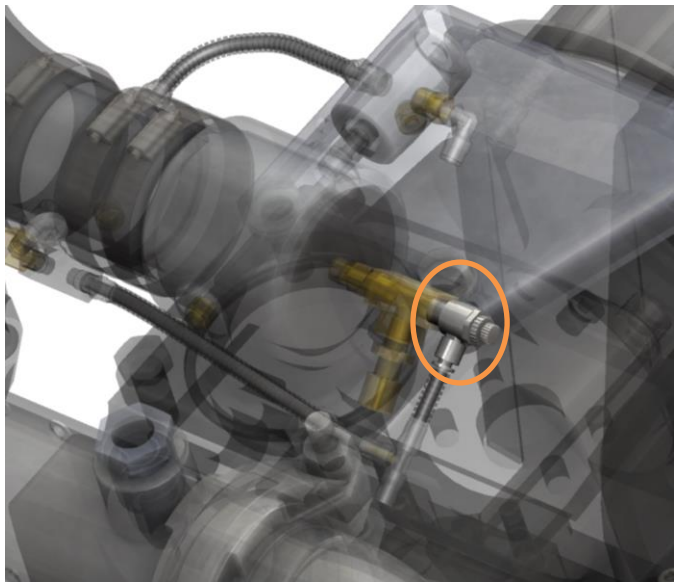

PART NUMBER	70141
DESCRIPTION	Air Intake Control Needle Valve
OPERATION	This valve controls the amount of air pressure limiting the air intake. The larger the air pressure the lower the air flow into the compressor. It also dampens the response of the air intake plunger.

POSSIBLE FAULT	• Air/Water tracking is not steady
	  ○ Needle valve is open too far.
	• Air/Water tracking is too slow when changing water pressure
	  ○ Needle valve is closed too far.
	
	See instructions on page **83**.

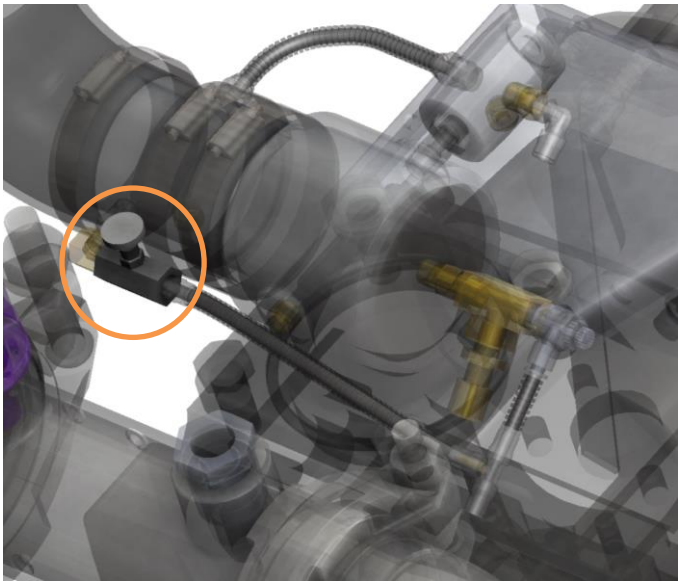

PART NUMBER	038-1680-01-0
DESCRIPTION	Air Intake Inlet Needle Valve
OPERATION	This valve controls the amount of air pressure dumping to atmosphere. The more air dumping the farther the air intake plunger opens.

POSSIBLE FAULT	• Air flow for wet is too great
	  ○ Needle valve is open too far.
	• Air/Water not tracking
	  ○ Needle valve is closed too far.
	  ○ Needle valve is clogged.
	• Air/Water is not dry enough
	  ○ Needle valve is closed too far.
	
	See instructions on page **83**.

©HALE PRODUCTS, INC. Our policy is one of continuous development. We therefore reserve the right to amend specifications without notice or obligation.

COMPRESSOR OPERATION

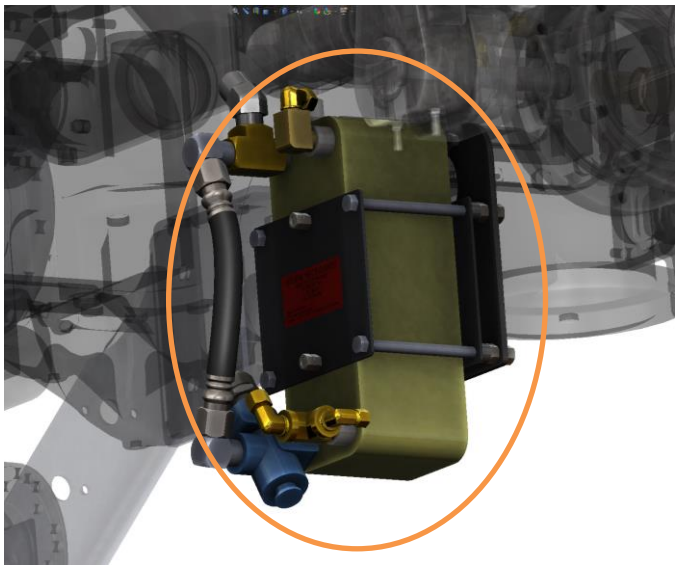

PART NUMBER	108-0641-00-0
DESCRIPTION	Heat Exchanger
OPERATION	Plate style heat exchanger cools the oil from the oil separator for the compressor with discharge water from the pump. Thermostatic Valve **038-1390-00-0** opens at 150°F (65°C) to allow the oil to run through the heat exchanger otherwise it bypasses the heat exchanger.

POSSIBLE FAULT	• Not opening
	  ○ No air from solenoid.
	  ○ Air port from solenoid is clogged.

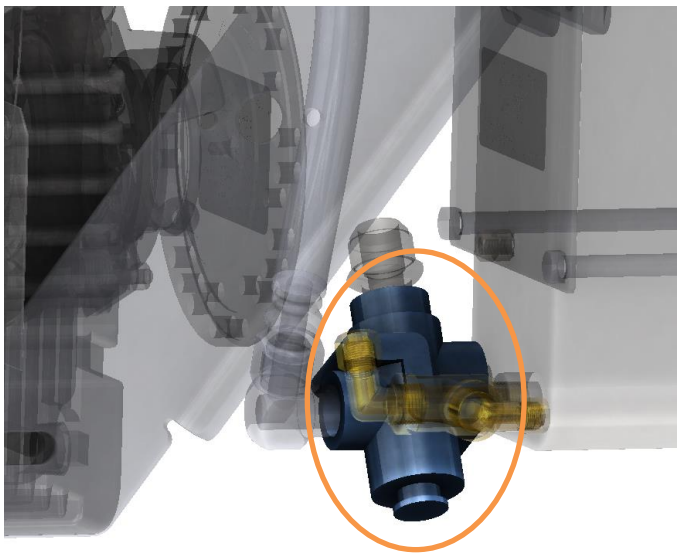

PART NUMBER	038-1390-00-0
DESCRIPTION	Thermostatic Oil Bypass Valve
OPERATION	Opens at 150°F (65°C) [fully opening at 170°F (76°C)] to allow the oil to run through the heat exchanger otherwise it bypasses the heat exchanger.

POSSIBLE FAULT	• Compressor is overheating
	  ○ Not fully opening.
	  ○ Oil temperature is above max operating temperature.

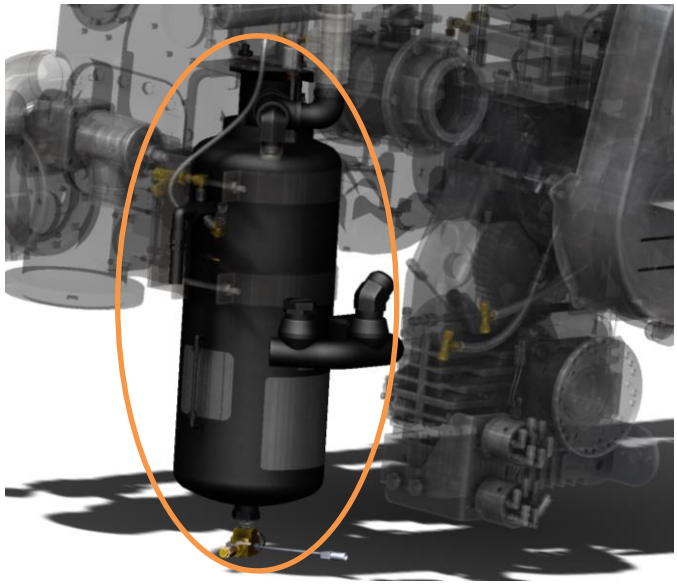

PART NUMBER	108-0630-00-0
DESCRIPTION	Oil Separator
OPERATION	Separates the air and oil through a series of chambers internally and any condensation/water, which can be drained from the bottom ball valve. The side “arm” is for replacing oil. The top port with the air valve is for discharging air to the pump or auxiliary port. The hex on the side supplies air to the control system for the compressor.

POSSIBLE FAULT	• Compressor is overheating
	  ○ Oil is not at proper level.
	  ○ Oil not being cooled by Heat Exchanger.
	• Air injection/Pressure match
	  ○ Hex port on side is leaking
	  ○ Brass orifice is missing from scavenge line.

©HALE PRODUCTS, INC. Our policy is one of continuous development. We therefore reserve the right to amend specifications without notice or obligation.

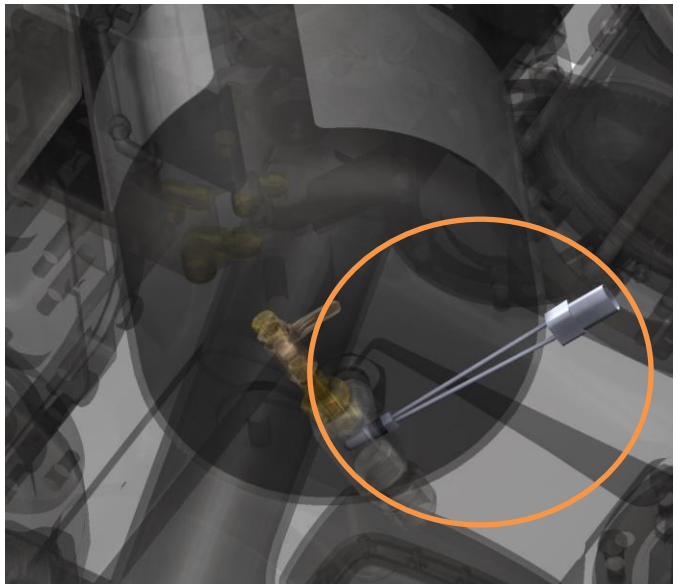

PART NUMBER	200-1161-00-0
DESCRIPTION	Oil Temperature Sensor
OPERATION	Temperature sensor enables/disables the compressor interlock. If temperature goes outside of operating range or if system loses signal from this sensor then the clutch will be disabled.

POSSIBLE FAULT	• Clutch is not engaging
	  ○ No signal from this sensor.
	  ○ Oil temperature is outside of operating range.

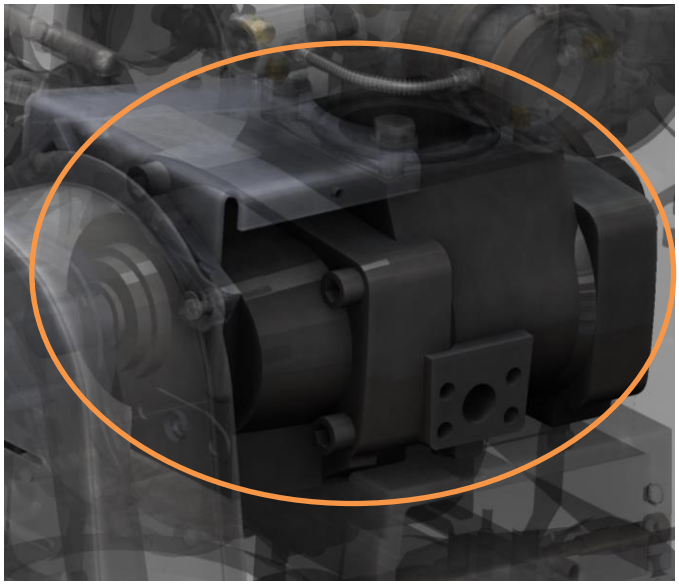

PART NUMBER	501-4140-01-0
DESCRIPTION	Compressor
OPERATION	Oil lubricated twin screw compressor is driven by gearbox by a herringbone drive belt that is enabled by a pneumatic clutch. Compressor is water cooled by plate heat exchanger. Air is supplied and controlled by the air intake valve.

POSSIBLE FAULT	• Clutch is not engaging
	  ○ See clutch section.
	• Overheating
	  ○ Belt is not a correct tension
	  ○ Heat exchanger not functioning
	  ○ Oil is not at correct level
	• No Air injection
	  ○ Air Intake Valve isn't opening
	  ○ Air Injection Valve isn't opening

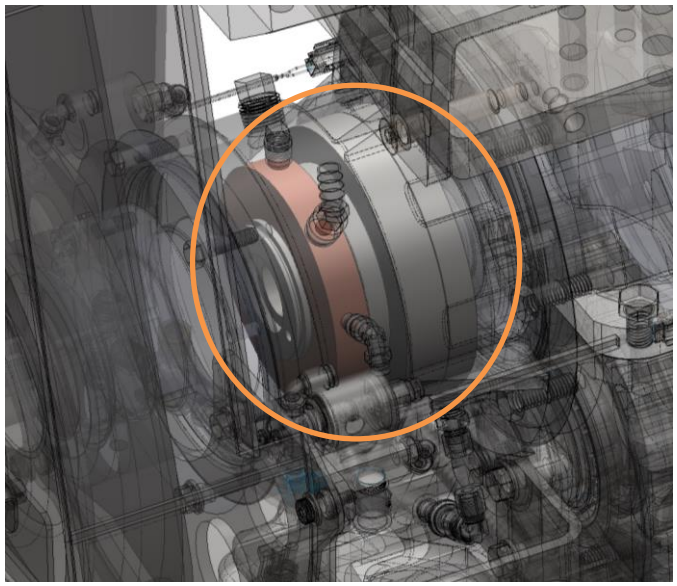

PART NUMBER	505-0260-01-0
DESCRIPTION	Clutch
OPERATION	Pneumatic Clutch that can be set through the UV display to be engaged upon start up or only when CAFS is needed. It operates from truck air and is enabled by a solenoid. The engagement timing is controlled by a needle valve attached to the engagement solenoid.

POSSIBLE FAULT	• Clutch is not engaging
	  ○ Clutch solenoid has failed
	  ○ Inadequate air supply
	  ○ Needle valve not set correctly.
	  ○ Interlocks are enabled.
	• Overheating
	  ○ Oil is at incorrect level
	  ○ Plates are damaged
	  ○ Belt is installed crooked
	  ○ Belt is not at correct tension.

©HALE PRODUCTS, INC. Our policy is one of continuous development. We therefore reserve the right to amend specifications without notice or obligation.

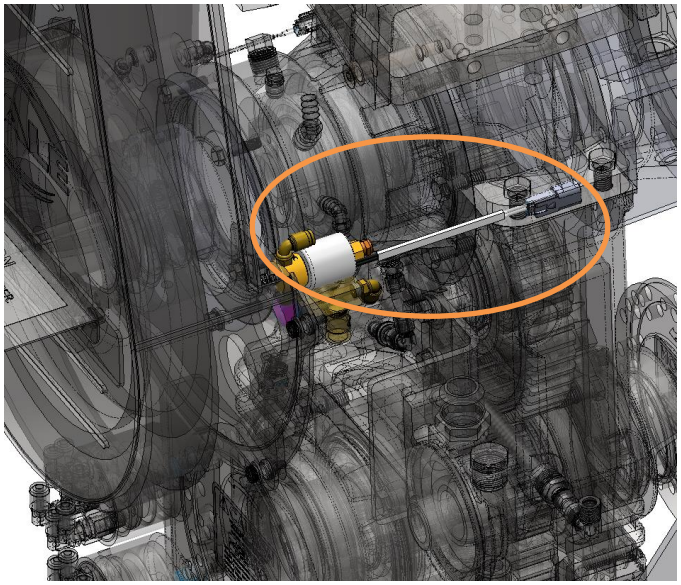

PART NUMBER	**12V:** 538-1910-10-0 **24V:** 538-1910-00-0
DESCRIPTION	Clutch Enable Solenoid
OPERATION	The clutch solenoid is normally closed. When all of the interlock conditions are met the solenoid opens and allows air to engage the clutch.

POSSIBLE FAULT	• Clutch is not engaging
	  ○ Clutch solenoid has failed
	  ○ Solenoid not receiving signal
	  ○ Inadequate air supply
	  ○ Interlocks are enabled.
	  ○ Incorrect Solenoid is installed (Voltage or Normally Open)

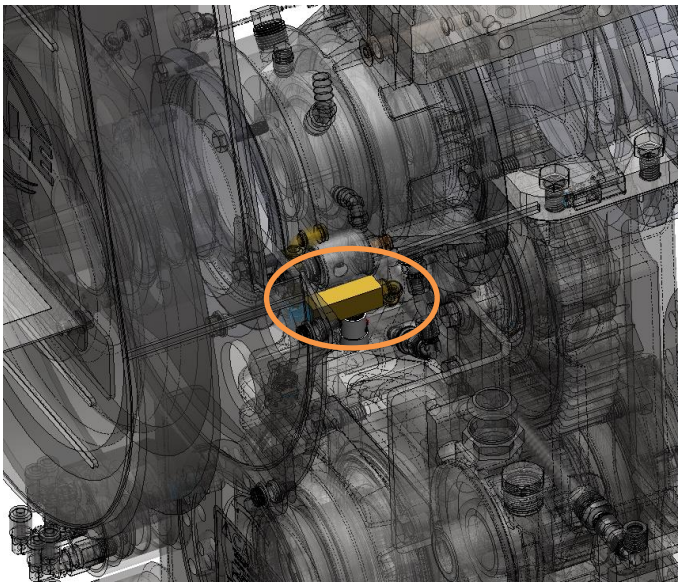

PART NUMBER	**038-2030-00-0**
DESCRIPTION	Clutch Needle Valve
OPERATION	Clutch needle valve controls the engagement speed of the clutch by controlling the amount of air going to the clutch. Closing the needle valve slows engagement, while opening the needle valve speeds engagement.

POSSIBLE FAULT	• Clutch is not engaging
	  ○ Clutch solenoid has failed
	  ○ Inadequate air supply
	  ○ Needle valve not set correctly.
	  ○ Interlocks are enabled.
	
	See "**CAFS – Hot Shift Clutch Engagement**" on page **85**.

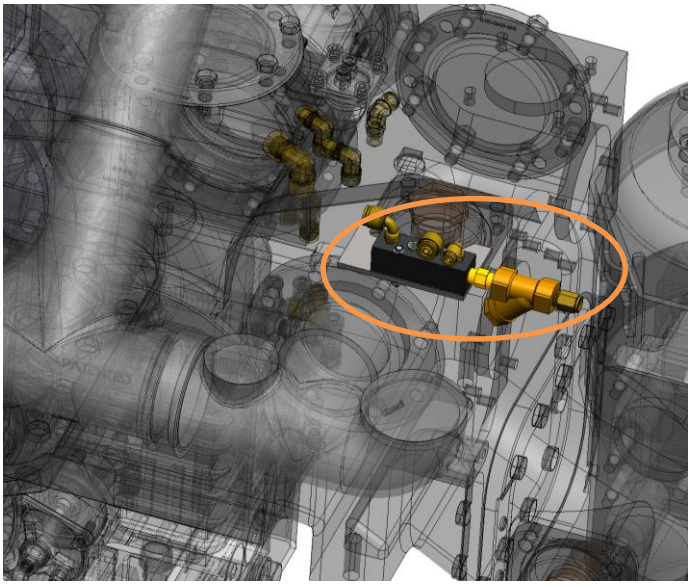

PART NUMBER	**178-1050-10-0**
DESCRIPTION	Truck Air Manifold
OPERATION	This air manifold is used as an inlet from the truck air. It supplies air to the Master Drain, Tank-to-Pump, and clutch.
POSSIBLE FAULT	Problems with Master Drain, Tank-to-Pump, and Clutch can be from: • Dirty Strainer • Leaks in Manifold • No air from truck

©HALE PRODUCTS, INC. Our policy is one of continuous development. We therefore reserve the right to amend specifications without notice or obligation.

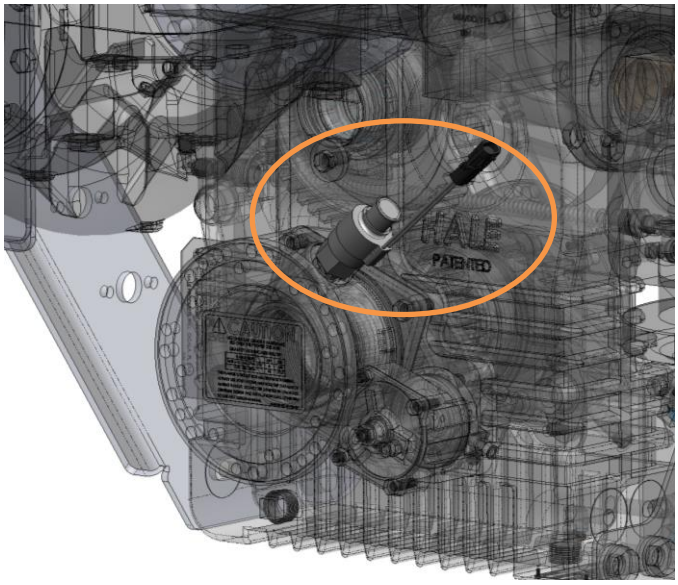

PART NUMBER	200-2610-00-0
DESCRIPTION	Tachometer
OPERATION	Tachometer reads the rotation of the drive shaft. It reports to the UV SmartCAFS display in order to meet interlock requirements for the clutch enable.
POSSIBLE FAULT	• Clutch is not engaging ○ Engine speed is too high ○ Tachometer has failed ○ Harness is damaged.

©HALE PRODUCTS, INC. Our policy is one of continuous development. We therefore reserve the right to amend specifications without notice or obligation.

CAFS OPERATION

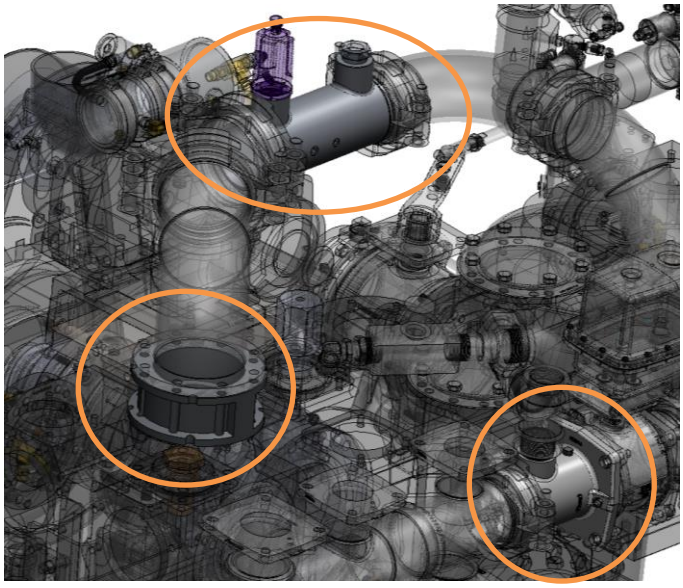

PART NUMBER	**SINGLE CHECK:** 538-1850-00-0 **DOUBLE CHECK:** 538-1840-00-0 **4" WAFER:** 038-1570-04-0 **4" WAFER QTWO:** 538-00038-001 **CAFS CHECK:** 114666
DESCRIPTION	Check Valves
OPERATION	The first two check valves isolate the pump from the foam, while the check valve after the ARC isolates the air from the foam. The configuration depends on the manifold ordered.

POSSIBLE FAULT	• Check Valve failure can result in:
	  ○ Foam in the pump body
	  ○ Poor CAFS pressure matching

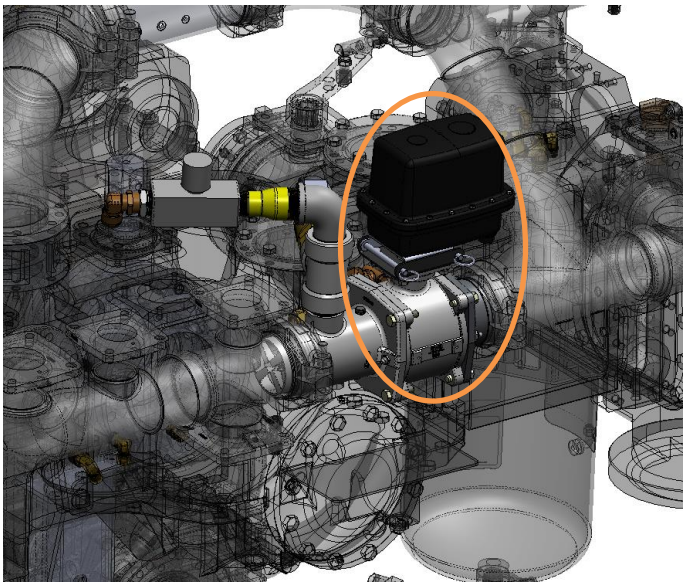

PART NUMBER	**538-1900-05-0**
DESCRIPTION	ARC VALVE
OPERATION	ARC valve controls the air/water ratio for CAFS operation. It automatically goes to full open when CAFS is not in operation. It is CAN controlled by the UV display. Bypass is installed for fine tuning (factory set).

POSSIBLE FAULT	• Poor CAFS performance
	  ○ ARC is stuck
	  ▪ (Remove actuator and loosen with ¾" wrench being careful to keep the valve orientation the same when replacing valve.
	  ▪ Grease valve
	  ○ No signal to ARC valve

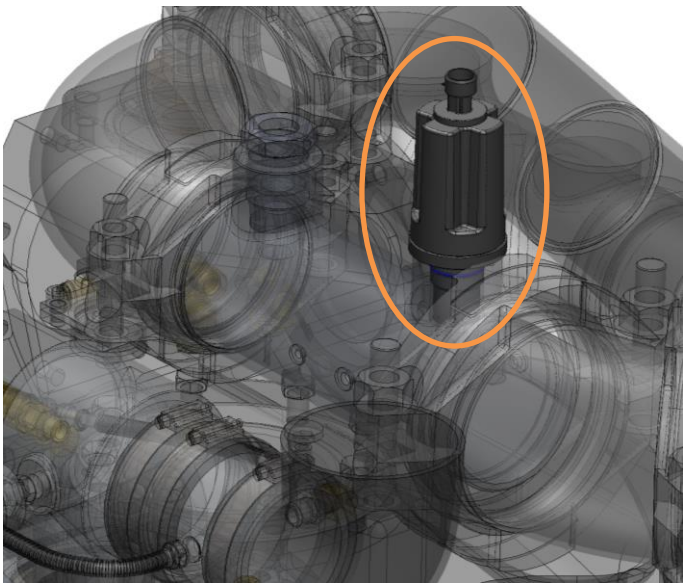

PART NUMBER	**STANDARD:** 102714 **HIGH PRESSURE KIT:** 8713198-1
DESCRIPTION	Paddlewheel
OPERATION	Paddlewheel measures the water flow before foam and air injection. The high pressure kit is for qtwo and other high pressure pump applications.

POSSIBLE FAULT	• No signal from paddlewheel can result in:
	  ○ No foam injection
	  ○ No air injection
	• Poor CAFS performance
	  ○ Paddlewheel is out of calibration
	  ○ Not properly grounded (can result in large jumps in the water flow reading).

©HALE PRODUCTS, INC. Our policy is one of continuous development. We therefore reserve the right to amend specifications without notice or obligation.

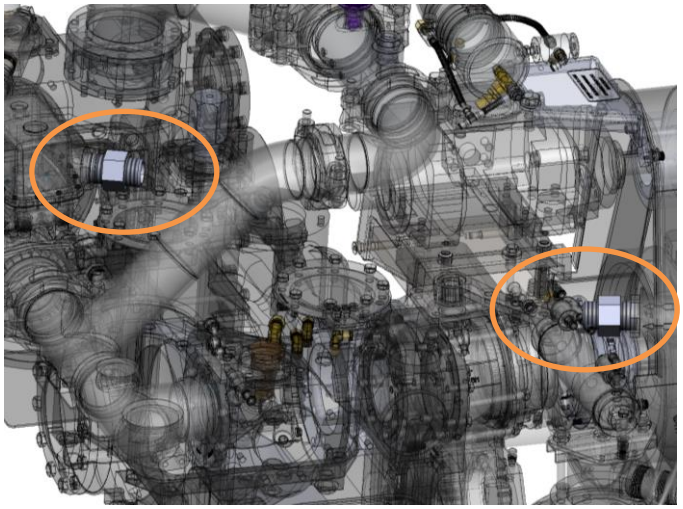

PART NUMBER	**STANDARD:** 038-1631-02-0
DESCRIPTION	Air Inject Check Valve
OPERATION	Air inject check valve prevents water from entering the oil separator.
POSSIBLE FAULT	• Check Valve failure can result in: ○ Water in the Oil Separator ○ Poor CAFS pressure matching

©HALE PRODUCTS, INC. Our policy is one of continuous development. We therefore reserve the right to amend specifications without notice or obligation.

Express Warranty

EXPRESS WARRANTY: Hale Products, Inc. (HALE) hereby warrants to the original Buyer that products manufactured by Hale are free of defects in material and workmanship for one (1) year. The "Warranty Period" commences on the date the original Buyer takes delivery of the product from the manufacturer.

LIMITATIONS: Hale's obligation is expressly conditioned on the Product being:

- Subjected to normal use and service.
- Properly installed, maintained in accordance with Hale's Instruction Manual as to recommended services and procedures.
- Not damaged due to abuse, misuse, negligence, or accidental causes.
- Not altered, modified, serviced (non-routine) or repaired other than by an Authorized Service Facility.
- Manufactured per design and specifications submitted by the original Buyer.

THE ABOVE EXPRESS LIMITED WARRANTY IS EXCLUSIVE. NO OTHER EXPRESS WARRANTIES ARE MADE. SPECIFICALLY EXCLUDED ARE ANY IMPLIED WARRANTIES INCLUDING, WITHOUT LIMITATIONS, THE IMPLIED WARRANTIES OF MERCHANTABILITY OF FITNESS FOR A PARTICULAR PURPOSE OR USE; QUALITY; COURSE OF DEALING; USAGE OF TRADE; OR PATENT INFRINGEMENT FOR A PRODUCT MANUFACTURED TO ORIGINAL BUYER'S DESIGN AND SPECIFICATIONS.

EXCLUSIVE REMEDIES: If Buyer promptly notifies HALE upon discovery of any such defect (within the Warranty Period), the following terms shall apply:

- Any notice to HALE must be in writing, identifying the Product (or component) claimed defected and circumstances surrounding its failure.
- HALE reserves the right to physically inspect the Product and require Buyer to return same to HALE's plant or other Authorized Service Facility.
- In such event, Buyer must notify HALE for a Returned Goods Authorization Number and Buyer must return the product F.O.B. within thirty (30) days thereof.
- If determined defective, HALE shall, at its option, repair or replace the Product, or refund the purchase price (less allowance for depreciation).
- Absent proper notice *within* the Warranty Period, HALE shall have no further liability or obligation to Buyer therefore.

THE REMEDIES PROVIDED ARE THE SOLE AND EXCLUSIVE REMEDIES AVAILABLE. IN NO EVENT SHALL HALE BE LIABLE FOR INCIDENTAL OR CONSEQUENTIAL DAMAGE INCLUDING, WITHOUT LIMITATION, LOSS OF LIFE; PERSONAL INJURY; DAMAGE TO REAL OR PERSONAL PROPERTY DUE TO WATER OR FIRE; TRADE OR OTHER COMMERCIAL LOSSES ARISING, DIRECTLY OR INDIRECTLY, OUT OF PRODUCT FAILURE.

©HALE PRODUCTS, INC. Our policy is one of continuous development. We therefore reserve the right to amend specifications without notice or obligation.