PHONE: 330.264.5678 or 800.228.1161 | FAX: 330.264.2944 or 800.531.7335 | www.akronbrass.com

REVISED: 7/12

AKRON BRASS COMPANY

ISO 9001 REGISTERED COMPANY

WARRANTY AND DISCLAIMER: We warrant Akron Brass products for a period of five (5) years after purchase against defects in materials or workmanship. Akron Brass will repair or replace product which fails to satisfy this warranty. Repair or replacement shall be at the discretion of Akron Brass. Products must be promptly returned to Akron Brass for warranty service.

We will not be responsible for: wear and tear; any improper installation, use, maintenance or storage; negligence of the owner or user; repair or modification after delivery; damage; failure to follow our instructions or recommendations; or anything else beyond our control. WE MAKE NO WARRANTIES, EXPRESS OR IMPLIED, OTHER THAN THOSE INCLUDED IN THIS WARRANTY STATEMENT, AND WE DISCLAIM ANY IMPLIED WARRANTY OF MERCHANTABILITY OR FITNESS FOR ANY PARTICULAR PURPOSE. Further, we will not be responsible for any consequential, incidental or indirect damages (including, but not limited to, any loss of profits) from any cause whatsoever. No person has authority to change this warranty.

© Premier Farnell Corporation. 2011 All rights reserved. No portion of this can be reproduced without the express written consent of Premier Farnell Corporation.

A Premier Farnell Company

AKRON® BRASS COMPANY

Style 8904

Field Service Kit with Composite Ball for:

8915 1 1/2" Swing-Out™ Valve and

7615 and 7815 1 1/2" Swing-Out Valve

® Registered Trademark of Premier Farnell Corp.

122922

PARTS LIST

Style 7615
Non Tork-Lok®
with Trunnion Retaining
Plate (#7)

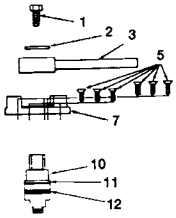

Style 7815
Tork-Lok® with
large stops built into
Trunnion Retaining
Plate (#7)

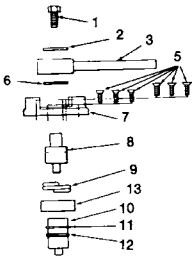

Style 7615
Non Tork-Lok® with stops
in Valve Body and
separate Stop
Plate (#4)

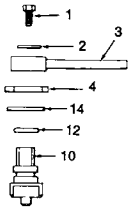

Style 7815 & 8915
with separate Stop
Plate (#4)

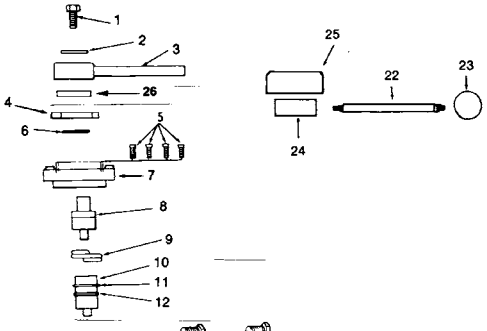

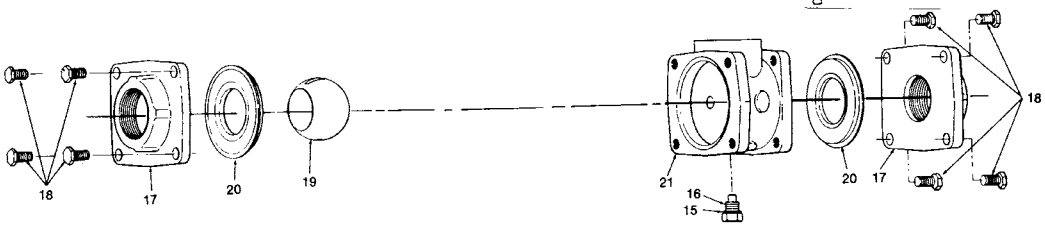

ITEM No.	DESCRIPTION	7615 with Trunnion Plate	7815 with Stops in Trunnion Plate	7615 with Separate Stop Plate	7815 with Separate Stop Plate	8915 with Separate Stop Plate
1	Handle Bolt	761067	761067	761067	765094	765094
2	Handle Washer	784008	784008	784008	784008	784008
3	Handle*					
4	Stop Plate	N/A	N/A	742074	742074	742074
5	Trunnion Plate Screws	767090 (6)	767090 (6)	N/A	765028 (4)	765028 (4)
6	Handle O-Ring	N/A	757105	N/A	757009	757009
7	Trunnion Retaining Plate	105706	***	N/A	742075	742075
8	Handle Trunnion	N/A	772091	N/A	772091	772091
9	Tork-Lok Spring	N/A	768116	N/A	768116	768116
10	Ball Trunnion	772087	773148	772114	773148	773148
11	Retaining Ring	758153	758153	N/A	758153	758153
12	Trunnion O-Ring	757042	757042	757174	757042	757042
13	Tork-Lok Sleeve	N/A	769176	N/A	N/A	N/A
14	7600 Handle Spacer	N/A	N/A	769313	N/A	N/A
15	Threaded Tnunnion O-Ring	757034	757034	757034	757034	757034
16	Threaded Trunnion	773092	773092	773092	773092	773092
17	Complete Adapters*					
18	Adapter Bolts (8)	761091	761091	761091	761091	761091
19	Ball	703978	703978	703978	703978	703978
20	Seats (2)	769177	769177	769177	769177	769177
21	Valve Body	106312	106312	106308	106312	106312
22	TS Handle Rod—5"	N/A	109148	N/A	109148	109148
23	TS Handle Ball	N/A	703080	N/A	703080	703080
24	TS Handle Hub	N/A	721202	N/A	721202	721202
25	TS Handle Cover	N/A	109916	N/A	109916	109916
26	Spacer**				769411	769411

* See current catalog for complete handles and adapters.
** For use with (FB) R1 handle only.
*** Requires conversion kit 7815-0057 to replace this obsolete part. Kit will include parts 1-12 w/ separate stop plate (right column).

REPAIR INSTRUCTIONS

DISASSEMBLY—BALL AND SEATS

Note: This kit includes extra O-rings for the different variations of valve. Identify the correct replacement O-rings when removing the old ones.

1. Turn the valve to the open position.
2. If the valve can be rotated out of line, remove three pairs of adapter bolts (18) and loosen the fourth pair. Swing the valve out of the line. If the valve cannot be rotated out of line, remove all eight adapter bolts and take the valve out completely. **Note: If it is necessary to remove the handle, mark the position of the handle in relation to the ball position, and the orientation of the stop plate (4) if so equipped.**
3. Remove the two seats (20) from the valve body (21). It may be necessary to partially close the ball and grasp the inside lip of the seat.
4. Remove the threaded trunnion (16). If necessary, use fine emery paper to clean up the smooth portion that fits into the ball. The ball should fit loosely on the trunnion.
5. Rotate the handle so that the slot in the top of the ball is parallel to the waterway. Remove the ball (19).

DISASSEMBLY—HANDLE AND TOP TRUNNION(S)

Note: If the valve is equipped with an electric actuator, do not disassemble this portion of the valve. The water tight seal will be broken and water may leak into the electronic controls chamber. If the valve is equipped with a standard type handle, it is not normally necessary to replace the O-ring under the handle or on the ball trunnion. Do not disassemble this portion of the valve unless there is a leak.

1. Remove the handle bolt (1) and washer (2).
2. Note the position of the handle relative to the groove in the top of the trunnion for reassembly purposes. Remove the handle (3) and the stop plate (4), handle O-ring (6) and handle spacer (14) if so equipped.
3. If the valve includes a trunnion retaining plate (7), note the position for reassembly purposes. Remove the trunnion plate screws (5).
   Note: With flat head screws, one screw may be tighter than the others. Try to loosen all remaining screws before using excessive force on one. If the valve does not have a retaining plate, remove the trunnion (10) by pushing it into the valve body.
4. Remove the trunnion retaining plate (7). If this plate was secured with socket head screws, the handle trunnion (8) should remain in the plate.
5. Remove the handle trunnion (8), if separate.
6. Remove the Tork-Lok® sleeve (13) and spring (9) subassembly if applicable.
   Caution: Do not remove the spring from inside the sleeve.
7. Remove the ball trunnion (10) by pushing it from the inside of the valve.

REASSEMBLY—HANDLE AND TOP TRUNNION(S)

Note: Lubricate all O-rings with Parker O-Ring Lube or equivalent petroleum-based lubricant.

1. Replace the O-ring (12) on the ball trunnion (10) and reinstall the trunnion in the valve body.
2. Replace the Tork-Lok sleeve (13) and spring (9) subassembly and handle trunnion (8) if so equipped.
   Note: The ears of the Tork-Lok spring must be aligned with the corresponding recess of the ball trunnion. The pilot shaft of the handle trunnion must fit into the hole in the center of the ball trunnion.
3. Reposition the trunnion retaining plate (7), if so equipped, and install the screws (5).
   Note: For Tork-Lok valves with flat head screws, tighten all six screws until they just touch the plate before fully tightening any one screw. Tighten them in a criss-cross pattern. There should be a small gap between the plate and the valve body.
4. Install the handle O-ring (6), style 7600 handle spacer (14), and stop plate (4) as required.
5. Position the handle in the proper position, apply a small amount of Locktite 222 or equivalent to the handle bolt (1) and install the bolt with the handle washer (2).
   Immediately test the operation of the handle. If it appears to be hard to turn, loosen the handle bolt approximately 1/4 turn.

REASSEMBLY—BALL AND SEATS

1. Install the new O-ring (15) on the threaded trunnion (16).
2. Use a 10" or larger flat file to clean up the flat surface of the adapters and mating surfaces of the valve body. Remove any paint, corrosion or raised lip around the bolt holes.
   Caution: Always file diagonally and keep the file touching both sides of the valve body. The surfaces must remain flat.
3. Rotate the handle so that the flats on the sides of the ball trunnion (10) are parallel to the waterway.
4. Install the new ball (19) over the ball trunnion and hold it in position.
   Note: The Metal Ball included with this kit is a direct replacement when repairing a valve with a plastic ball.
5. Install the threaded trunnion so that it fits into the hole in the ball. Tighten the trunnion.
6. Place the new seats into the recesses on either side of the valve body (21).
7. Swing the valve body back into line or install the assembly. Loosely install the adapter bolts.
8. Turn the ball to the closed position.
   Caution: The ball must be in the closed position before the adapter bolts are tightened.
9. Tighten the adapter bolts evenly in an X pattern using 215-240 inch pounds of torque.

   DO NOT OVERTIGHTEN.

10. Operate the valve and test for leakage.

MAINTENANCE INSTRUCTIONS

Do not lubricate the ball or seats. Lubricants can collect dirt and grit which may cause excessive wear. Occasionally, flow water through all valves to clear dirt and debris.

OPERATING INSTRUCTIONS

Always open and close valves slowly.

Do not exceed 500 psi with 1 1/2" valves. With SZ handles, always make sure that the handle has been tightened whenever the valve handle is released.

To ensure continued quality performance, use only AKRON replacement parts.