STYLE 5148 MERCURYMASTER OSCILLATING NOZZLE
INSTALLATION, OPERATING, AND MAINTENANCE INSTRUCTIONS

The following is intended to provide the basic instructions for installation, operation, and maintenance. Read and understand these operating instructions before use.

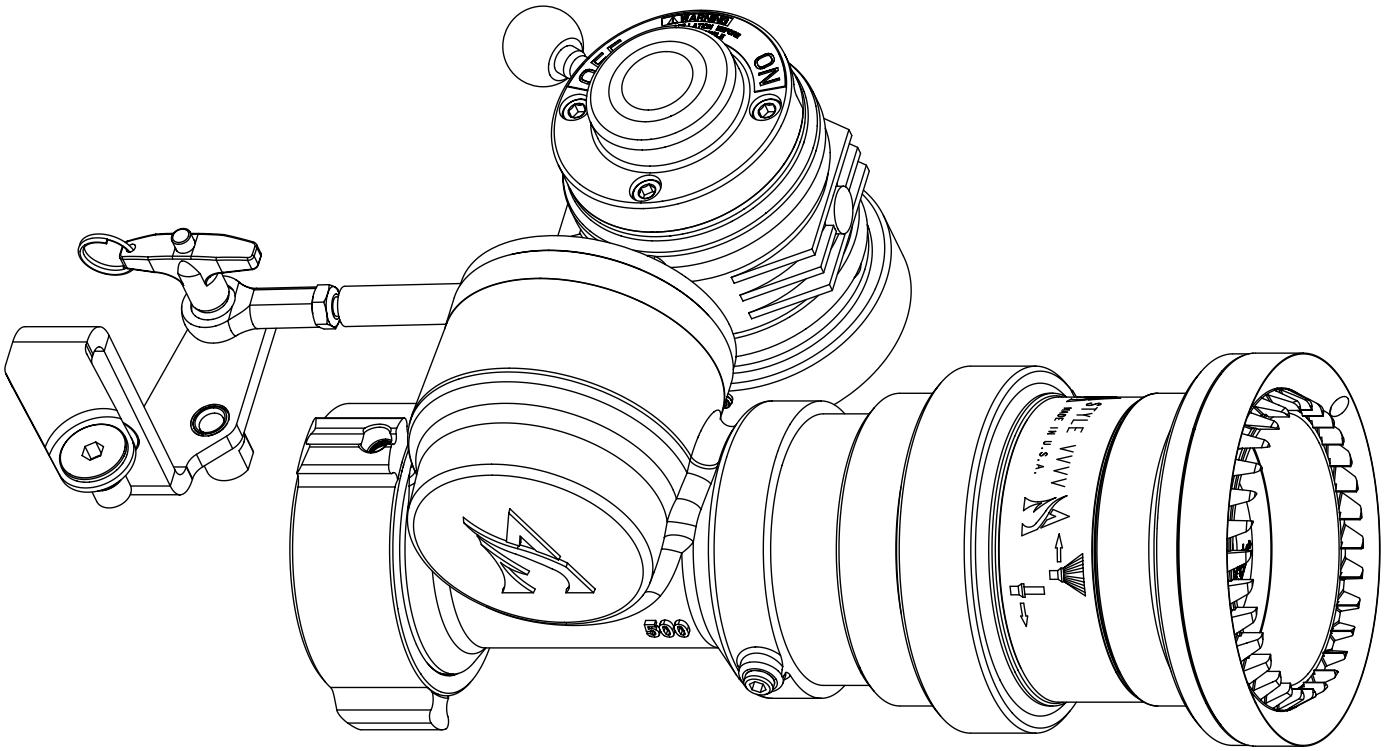

WARNING Read and follow the operating instructions before use.

WARNING For firefighting use only.

Product Ratings

Mechanical Specifications:

Parameter	US Measure	Metric Measure
Maximum Flow Rate	500 GPM	1900 LPM
Maximum Pressure	150 PSI	10 Bar
Mass (includes bracket and trunnions)	11.6 Lbs.	5.3 kg

Tools Required

- Hammer
- 1/8” Punch
- 5/8” Open end wrench
- 1/4” Allen wrench

Product Warnings

DANGER • Indicates a hazardous situation which, if not avoided, WILL result in death or serious injury.

WARNING • Indicates a hazardous situation which, if not avoided, COULD result in death or serious injury.

CAUTION • Indicates a potentially hazardous situation which, if not avoided, may result in minor or moderate injury.

NOTICE • Addresses practices not related to personal injury.

WARNING • This product is intended for use with the Mercury Quick Attack portable monitor only. Read and follow the operating instructions for the monitor before use.

WARNING • Read and follow the operating instructions for Style 5148, 500gpm before use.

WARNING • Use only for firefighting by trained operators.

WARNING • Do not exceed the maximum pressure or flow ratings for the monitor.

WARNING • Make sure monitor legs are fully deployed, and all three spikes are in contact with the ground and safety strap is secure before use.

WARNING • Make sure the monitor is pointed in a safe direction before flowing the water.

WARNING • Make sure the monitor valve is closed when advancing the monitor. Do not move or lift the monitor while flowing.

WARNING • The Mercury Quick Attack monitor is supplied with a 2.5” ball valve. Open and close the valve slowly. Opening and closing the valve too quickly may result in damage to other equipment, which can result in an injury to the operator or others.

WARNING • Do not alter any components in any way.

WARNING • Charge the unit slowly. Rapid charging may cause a pressure surge with the potential to cause injury or damage to the unit.

⚠ WARNING • At pressures below the rated pressure indicated on the label, the nozzle will have reduced flow and reach. Be sure you have enough flow and pressure for the situation (See IFSTA and NFPA manuals for guidelines).

⚠ WARNING • At pressures below the rated pressure, the oscillating nozzle may not oscillate. Obstructions to the flow through the nozzle will also cause the nozzle to not oscillate.

⚠ WARNING • Not for use on electrical fires. May cause electrocution.

⚠ WARNING • Ensure the thread on the nozzle swivel is matched to the thread on the Mercury Quick Attack outlet. Do not use thread adapters between the monitor and nozzle.

⚠ WARNING • Read and follow the tip pressure and flows in the operating instructions before use.

⚠ WARNING • Before operating the oscillating nozzle, make sure the connecting rod in Figure 6 is parallel with the water way. Failure to do so may cause the oscillating mechanism to bind during operation.

⚠ WARNING • Do not adjust oscillating angle while oscillating.

⚠ CAUTION • If any tags or bands on the nozzle are worn or damaged and cannot be easily read, they should be replaced.

⚠ CAUTION • For use with fresh water or standard firefighting foams only. Not recommended for use with salt water. After use with foam or salt water, flush with fresh water.

⚠ CAUTION • Do not over tighten the nozzle onto the mating connections.

⚠ CAUTION • The nozzle is configured for optimum performance. Do not alter in any manner.

⚠ CAUTION • Your nozzle should be inspected prior to and after each use to ensure it is in good operating condition.

Periodically an unanticipated incident may occur where the nozzle is used in a manner that is inconsistent with standard operating practices from those listed in IFSTA. A partial list of potential misuses follows:

- Operating above maximum rated pressure and flow.
- Not draining and allowing water to freeze inside the nozzle.
- Dropping the nozzle from a height where damage is incurred.
- Prolonged exposure to temperatures above +130 degrees F, or below -25 degrees F.
- Operating in a corrosive environment.
- Other misuse that might be unique to your specific firefighting environment.

There are many “tell-tale” signs that indicate nozzle repair is in order such as:

- Controls that are either inoperable or difficult to operate.
- Excessive wear.
- Poor discharge performance.
- Water leaks.

If any of the above situations are encountered the nozzle should be taken out of service and repaired and tested by qualified nozzle technicians prior to placing the nozzle back into service.

Bracket Installation

1. Using a hammer and a 1/8” punch remove the roll pin on the end of the handle closest to the outlet of the Mercury Quick Attack as shown in Figure 1.
2. Rotate the handle upward and out of the way to gain access to the top trunnion as shown in Figure 2.
3. Using a 5/8” open end wrench remove the top trunnion and the trunnion on the left side of the Mercury Quick Attack.
4. Position the bracket over the trunnion holes as shown in Figure 3.
5. Apply Loctite 277 or equivalent to each new trunnion provided with the nozzle. The trunnions are easily installed by pushing down on the outlet of the Mercury Quick Attack which will align the trunnion holes in the outlet. Tighten using the ¼” Allen wrench, and tighten to 25 ft. - lbs.
6. While tightening the trunnions make sure the outlet continues to smoothly rotate up and down and left to right. There should be no binding of the outlet in either plane of travel after the trunnions are tightened.
7. Reinstall the handle roll pin using a hammer and the 1/8” roll pin. The finished bracket installation is shown in Figure 4.

FIGURE: 1

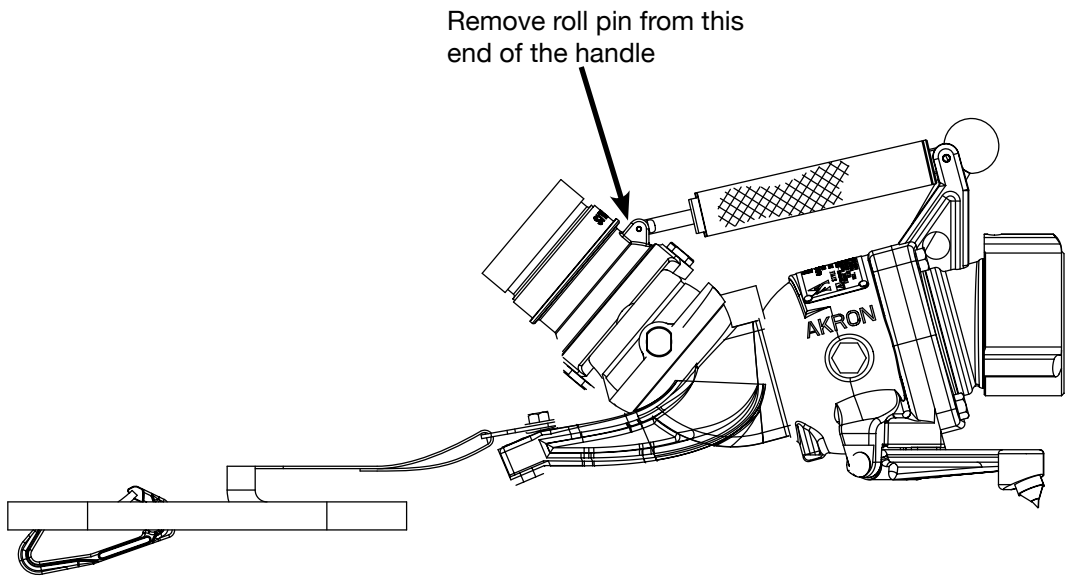

FIGURE: 2

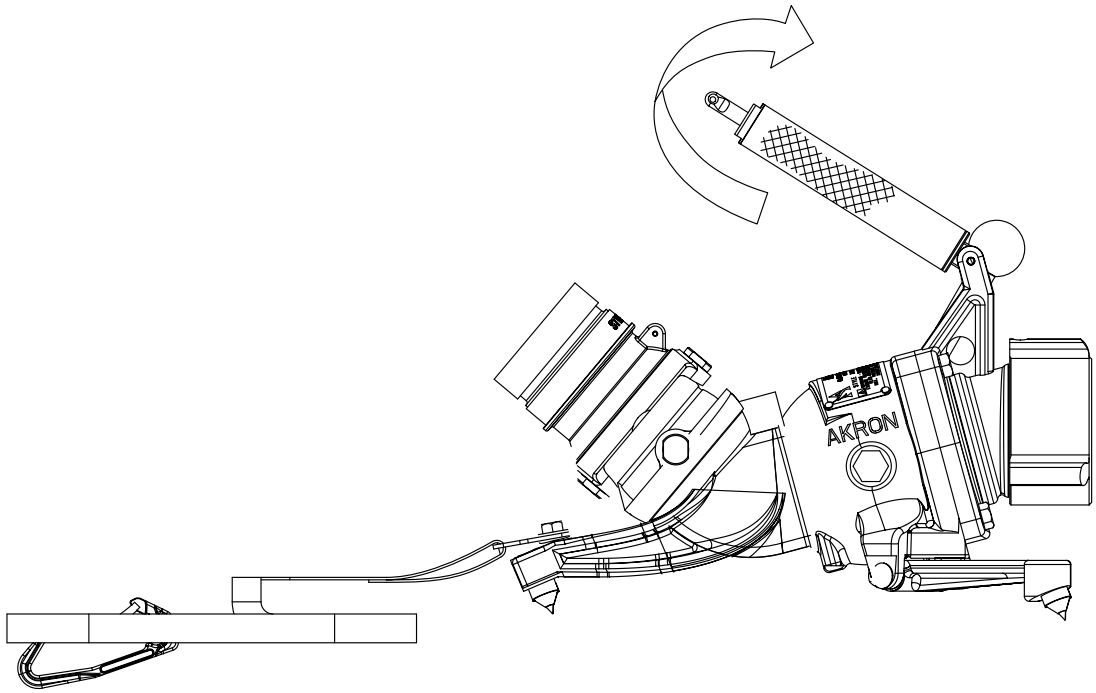

FIGURE: 3

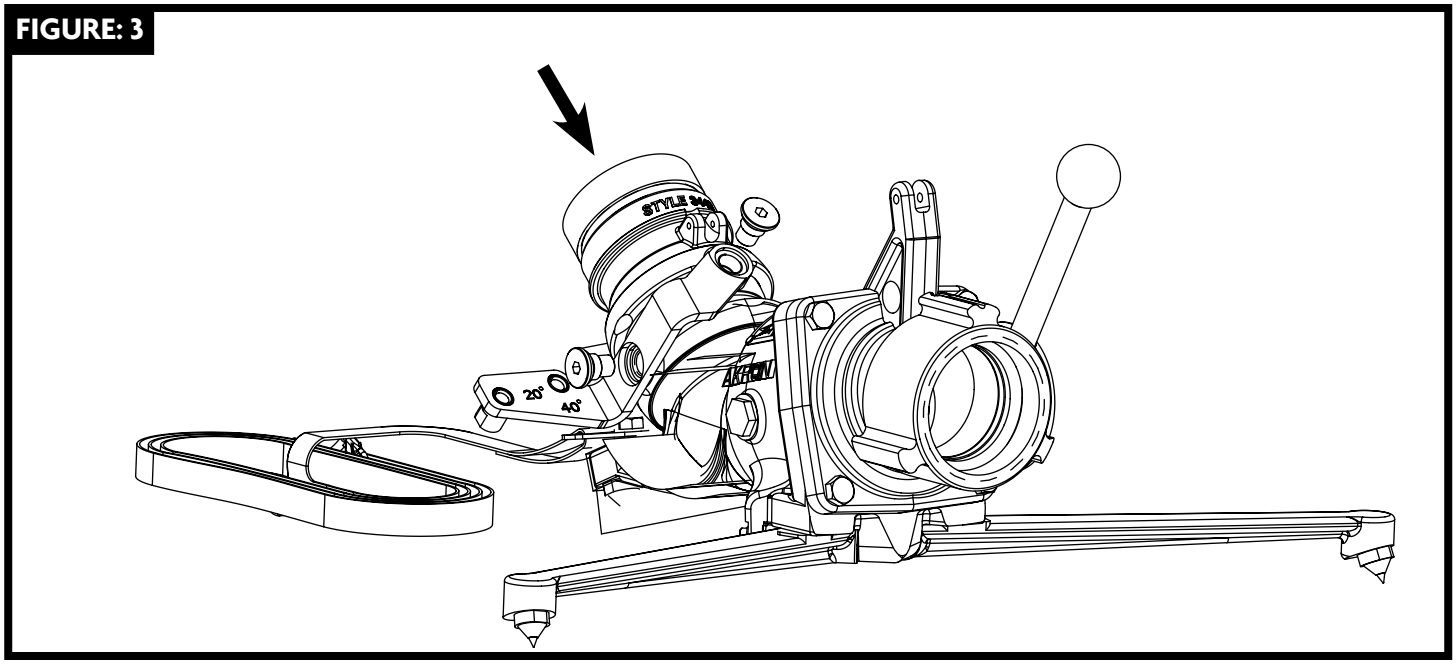

FIGURE: 4

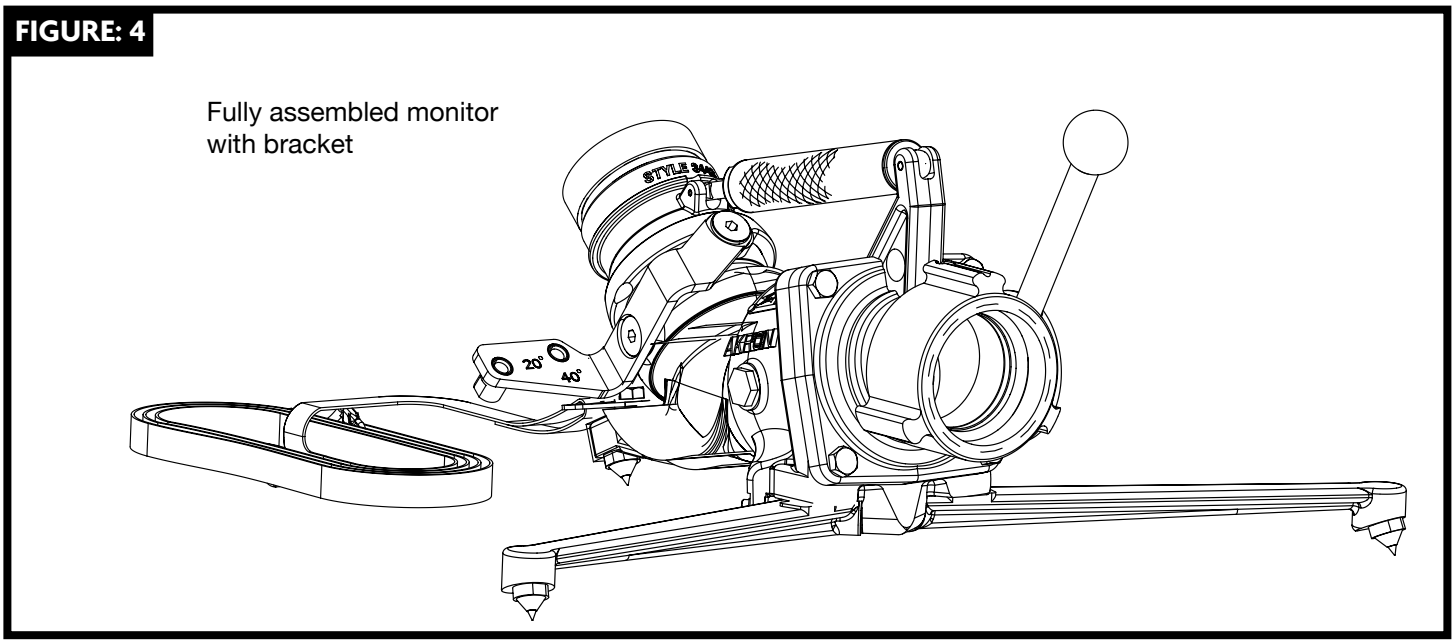

Elevation Lock Knob and Lower Trunnion Installation

1. When looking from the inlet towards the outlet of the monitor, using a 5/8” open end wrench remove the right side trunnion from the elevation joint. Apply Permabond HH120 or equal thread locking to the lock knob trunnion and install the pre-assembled locking knob in its place. When tightening the lock knob trunnion make sure the lock knob is fully loosened to allow the trunnion to be completely tightened.
2. Using a 5/8” open ended wrench remove the bottom trunnion on the rotation joint. To access the trunnion place the outlet in the fully raised position.
3. Apply Loctite 277 or equal to the threads on the longer lower trunnion and install into the rotation joint. Tighten using a 5/8” open ended wrench to 25 ft. - lbs. The longer lower trunnion is required to limit the lower elevation to 30 degree so the oscillating nozzle cannot be locked at an elevation lower than 30 degrees and left unattended.
4. Operate the locking knob to confirm the elevation joint movement is restricted when the locking knob is tightened.
5. Figure 5 shows a fully assembled Mercury Quick Attack with the lock knob and lower trunnion installed.

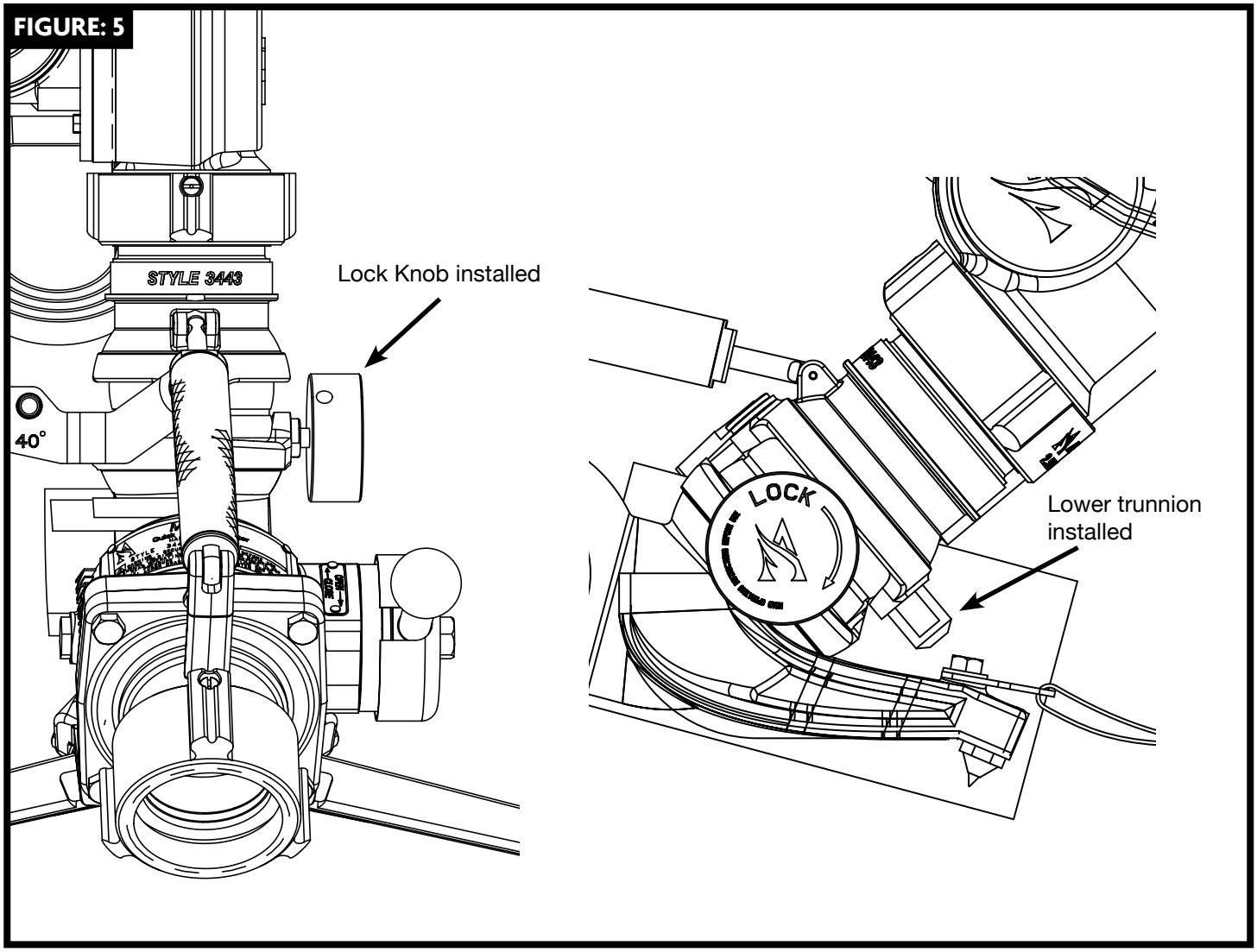

Nozzle Installation

WARNING • Ensure the thread on the nozzle swivel is matched to the thread on the Mercury Quick Attack outlet.

WARNING • Before operating the oscillating nozzle, make sure the connecting rod in figure 6 is parallel with the water way. Failure to do so may cause the oscillating mechanism to bind during operation.

1. Tighten the nozzle swivel to the outlet of the Mercury Quick Attack. The swivel must be tight to keep the nozzle from loosening during operation.
2. The nozzle must be oriented as shown in Figure 6 to ensure proper alignment of the connecting rod.
3. Following the operating instructions, flow water through the nozzle and monitor assembly to ensure the oscillating mechanism does not bind during oscillation.
4. The nozzle is ready for use.

FIGURE: 6

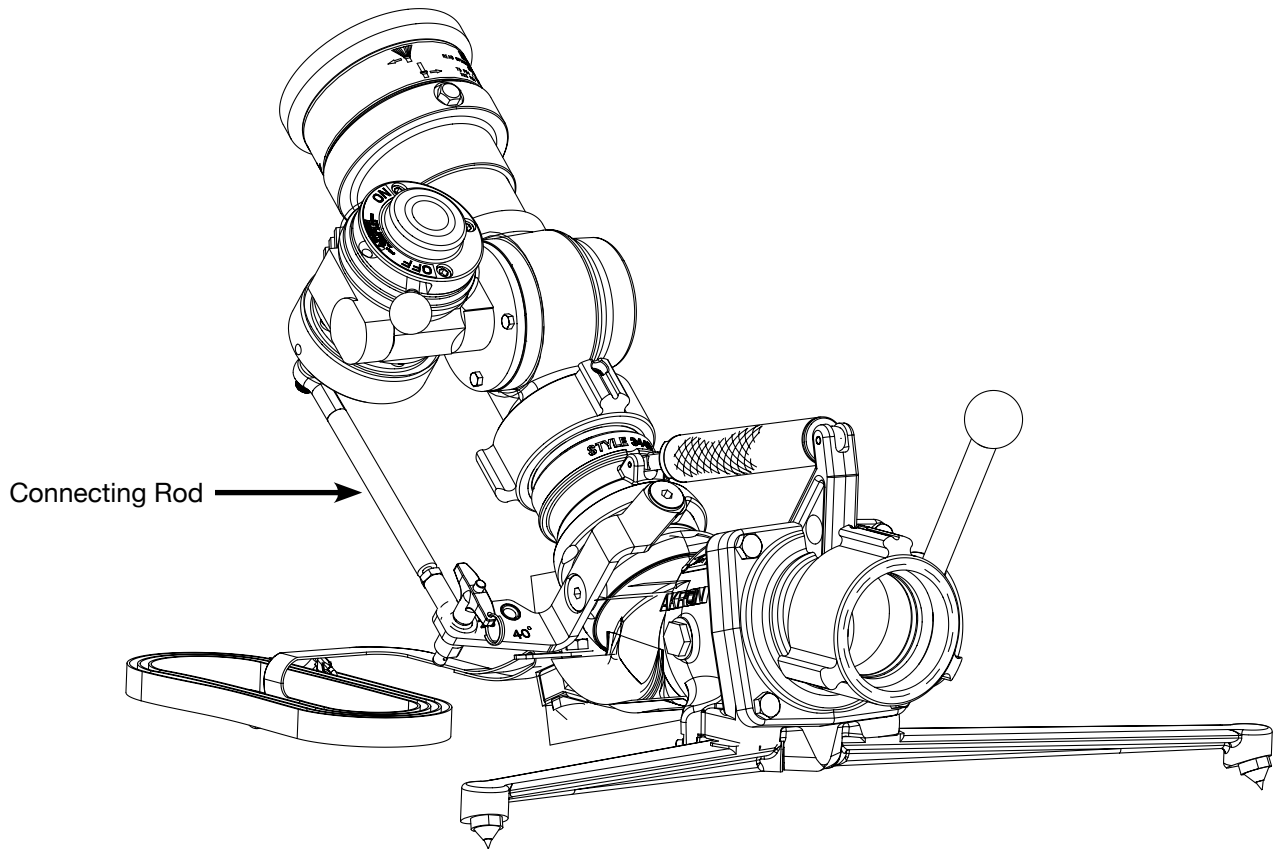

Operating Instructions

⚠ WARNING • Charge all lines slowly to facilitate a controlled water pressure build-up during start-up. Open and close slowly. Rapid opening will produce a sudden thrust. Rapid opening or closing can cause water hammer. Have enough firefighters on the line to safely control the reaction force created by the stream

⚠ WARNING • Make sure the legs are fully deployed and all three spikes are in contact with the ground and safety strap is secure before use.

⚠ WARNING • At pressures below the rated pressure, the oscillating nozzle may not oscillate. Obstructions to flow through the nozzle will also cause the nozzle to not oscillate.

⚠ WARNING • Do not adjust oscillation angle while oscillating.

1. The flow setting for this nozzle is 500gpm/1900lpm with a pressure of 75psi/5bar at the inlet to the nozzle.
2. With the oscillation selector set to the OFF position, select the desired oscillation angle of 20° or 40° by pushing the center release button on the T-handle. As shownin Figure 8.
3. Center the monitor and nozzle on the target. The nozzle will oscillate symmetrically about the center position.
4. Turn the lock knob inward to lock the elevation in the desired position. Releasing the lock knob will allow vertical repositioning of the nozzle.
5. With water flowing, move the oscillation selector from OFF to ON to begin oscillation, Figure 7.
6. While flowing rotate the pattern sleeve to obtain the ideal stream quality.
7. To stop oscilation, move the selector from ON to OFF.

FIGURE: 7

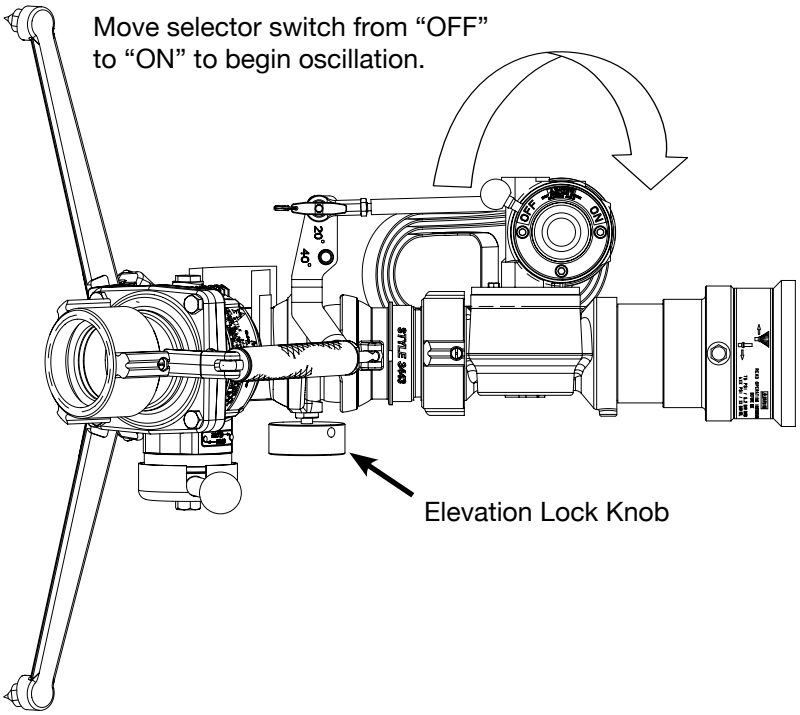

FIGURE: 8

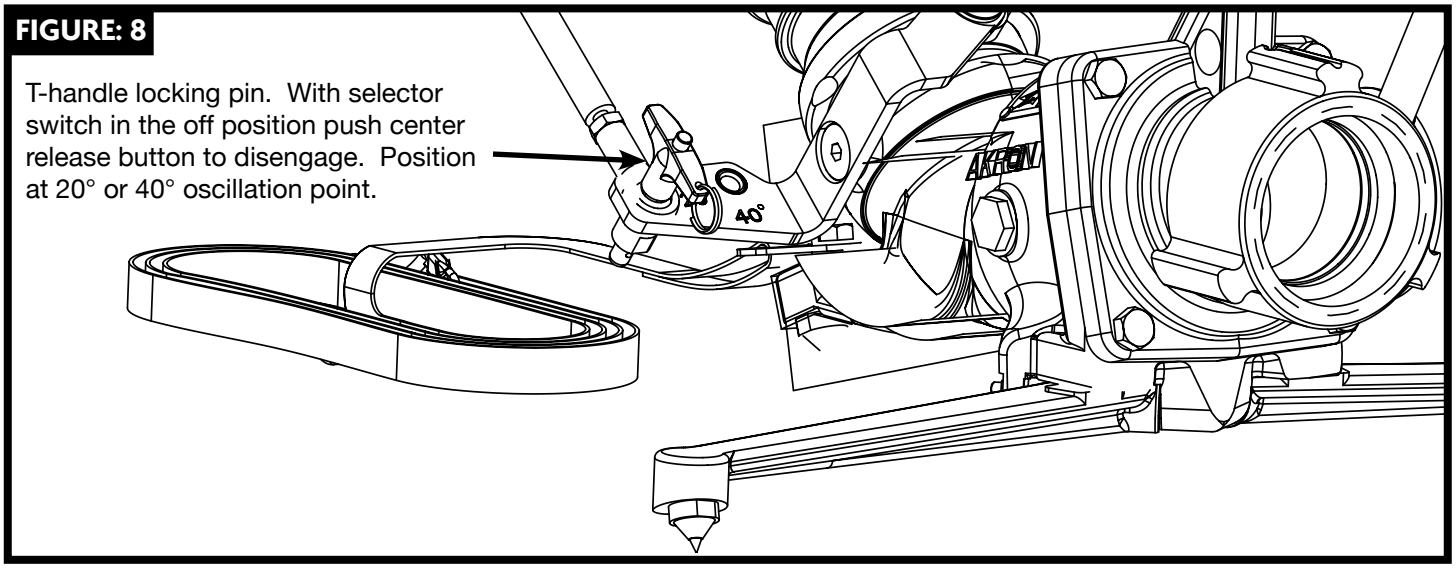

Maintenance Instructions

- Inspect nozzle prior to and after each use to ensure it is in good operating condition.
- Under normal conditions periodically flushing the nozzle with clean water, cleaning grit and dirt from around exterior moving parts will allow the nozzle to operate as designed.
- Over time the seals may need to be replaced. This can be accomplished by purchasing the appropriate Akron repair kit. Use qualified maintenance mechanics or return the nozzle to Akron Brass Company for repair.
- Regularly check the baffle screw to be sure it is tight.
- Use low temp Lubriplate on metal parts and Parker O-Ring lubricant on O-Rings.

AKRON BRASS COMPANY

Tested... Proven... Trusted.

ISO 9001 REGISTERED COMPANY

PHONE: 330.264.5678 or 800.228.1161 I FAX: 330.264.2944 or 800.531.7335 I akronbrass.com

REVISED: 04/21

WARRANTY AND DISCLAIMER: We warrant Akron Brass products for a period of five (5) years after purchase against defects in materials or workmanship. Akron Brass will repair or replace product which fails to satisfy this warranty. Repair or replacement shall be at the discretion of Akron Brass. Products must be promptly returned to Akron Brass for warranty service.

We will not be responsible for: wear and tear; any improper installation, use, maintenance or storage; negligence of the owner or user; repair or modification after delivery; damage; failure to follow our instructions or recommendations; or anything else beyond our control. WE MAKE NO WARRANTIES, EXPRESS OR IMPLIED, OTHER THAN THOSE INCLUDED IN THIS WARRANTY STATEMENT, AND WE DISCLAIM ANY IMPLIED WARRANTY OF MERCHANTABILITY OR FITNESS FOR ANY PARTICULAR PURPOSE. Further, we will not be responsible for any consequential, incidental or indirect damages (including, but not limited to, any loss of profits) from any cause whatsoever. No person has authority to change this warranty.

© Akron Brass Company. 2017 All rights reserved. No portion of this can be reproduced without the express written consent of Akron Brass Company.