STYLE 3463 FIREFOX™
INSTALLATION, OPERATING and MAINTENANCE INSTRUCTIONS
With Position Feedback Potentiometer

The following is intended to provide the basic instructions for installation, operating and maintenance of the FireFox.

TOOLS REQUIRED

- Utility knife
- Medium Phillips screwdriver
- Small Phillips screwdriver
- Electrician's pliers (multipurpose, stripping and crimping)
- Medium flat screwdriver
- Small flat screwdriver
- 1/2 inch hex head wrench

PRODUCT RATINGS

Maximum motor current draw:

12 volt versions 14.0 amps each for elevation and rotation motors
3.0 amps for nozzle pattern motor

24 volt versions 7.5 amps each for elevation and rotation motors
1.5 amps for nozzle pattern motor

Normal operating current (depending on operating conditions - pressure, flow, etc.):

12 volt versions 3 - 10 amps each for elevation and rotation motors
0.7 amps for nozzle pattern motor

24 volt versions 2 - 5 amps each for elevation and rotation motors
0.4 amps for nozzle pattern motor

Minimum Voltage: **(Truck engine must be operating for proper voltage requirement.)**
All 12 volt motors: 11.5 volts while operating
All 24 volt motors: 23 volts while operating

Mass: 31 lbs. (17.7 kg)

Maximum Flow: 500 GPM (1420 lpm)

Maximum Pressure: 200 PSI (14 bar)

Noise Emission: 91 Db @1m with maximum flow

PRODUCT WARNINGS

⚠**WARNING:** The maximum flow of the FireFox is 500 GPM. The center of the waterway outlet is 10.75 inches from the bottom of the inlet. Ensure these values and an appropriate safety factor is used to determine a proper support structure.

⚠**WARNING:** Aim the FireFox in a safe direction before pumping water through it.

⚠**WARNING:** Although the logic box includes a water resistant coating it is important to keep water out of the control and logic boxes. Prolonged exposure to water will cause damage. When the cover of the control or logic box is removed check that the O-Ring under the cover is intact and free of dirt and debris.

⚠**WARNING:** The FireFox uses current limiting for both the monitor and nozzle stops. Use only appropriate Akron Brass nozzles.

⚠**WARNING:** Do not use the electric controls when the override cranks are being used or are in position for use.

⚠**WARNING:** If any tags or bands are worn or damaged and cannot be easily read, they should be replaced.

⚠**WARNING:** Disconnect power and disable flow before maintenance.

⚠**WARNING:** Keep all personnel out of the Danger Zone (Figure 4), in front of the outlet of the monitor when the water source is attached. Dangerous flow velocities can cause serious injury.

⚠**WARNING:** The FireFox monitor contains moving parts. Keep hand, finger and objects away from pinch points.

⚠**WARNING:** Not designed for explosive environments.

⚠**WARNING:** Exceeding the maximum pressure and flow of the monitor or nozzle may cause damage.

⚠**WARNING:** Do not disconnect monitor from quick disconnect base while flowing.

GENERAL INSTRUCTIONS

- Review the instructions, wiring diagram, component layout and rotational stops diagram before installing this unit. This unit operates on 12 or 24 volt DC depending on the unit chosen. All electrical current flows through the wires. The monitor does not act as a ground. The wires from the control boxes can be cut to the length for the application plus 10 inches (See STEP 2). Do not extend the wires from the logic box to the monitor.

Figure 1

DIMENSIONAL LAYOUT

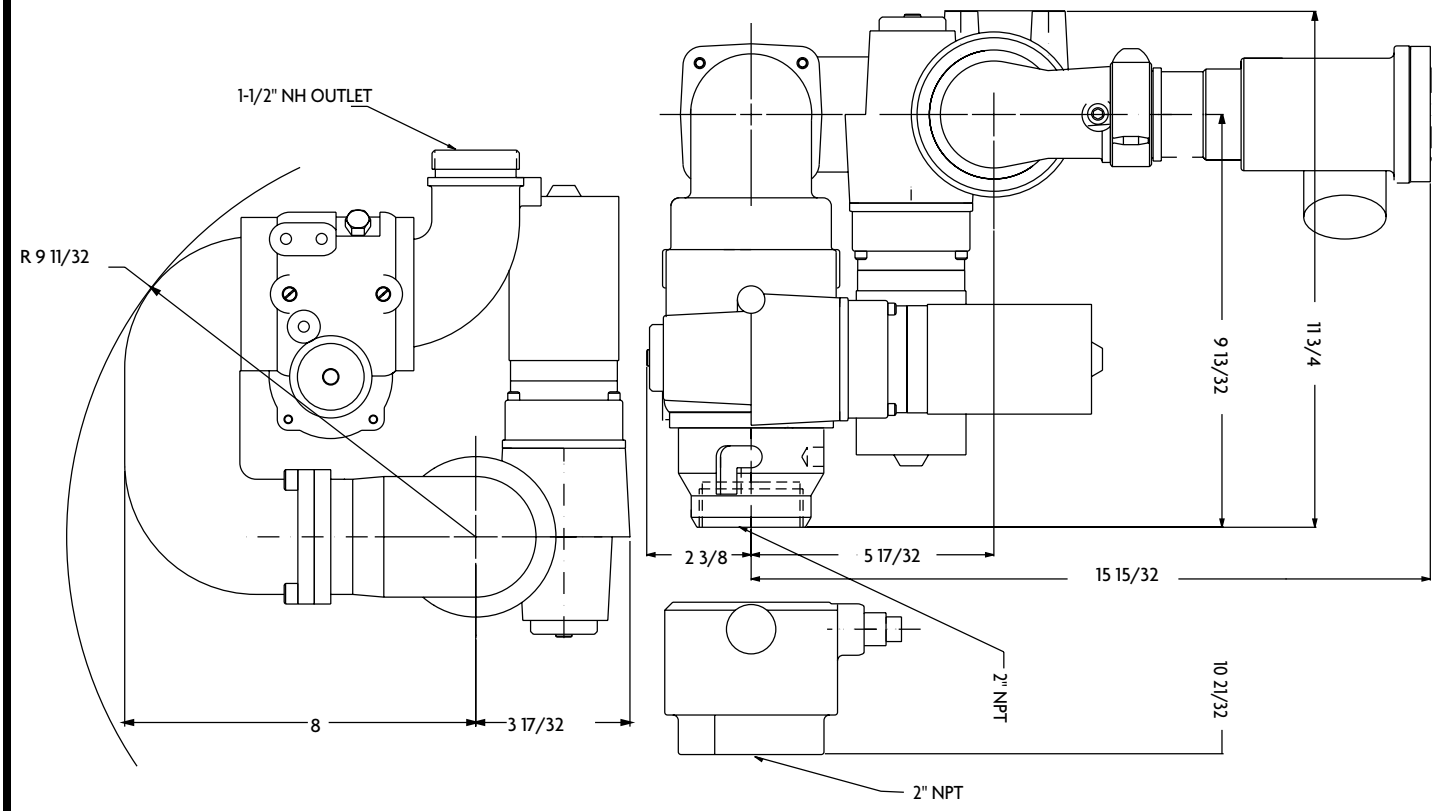

Top View **Side View**

Figure 2

ELECTRICAL COMPONENT LAYOUT STANDARD

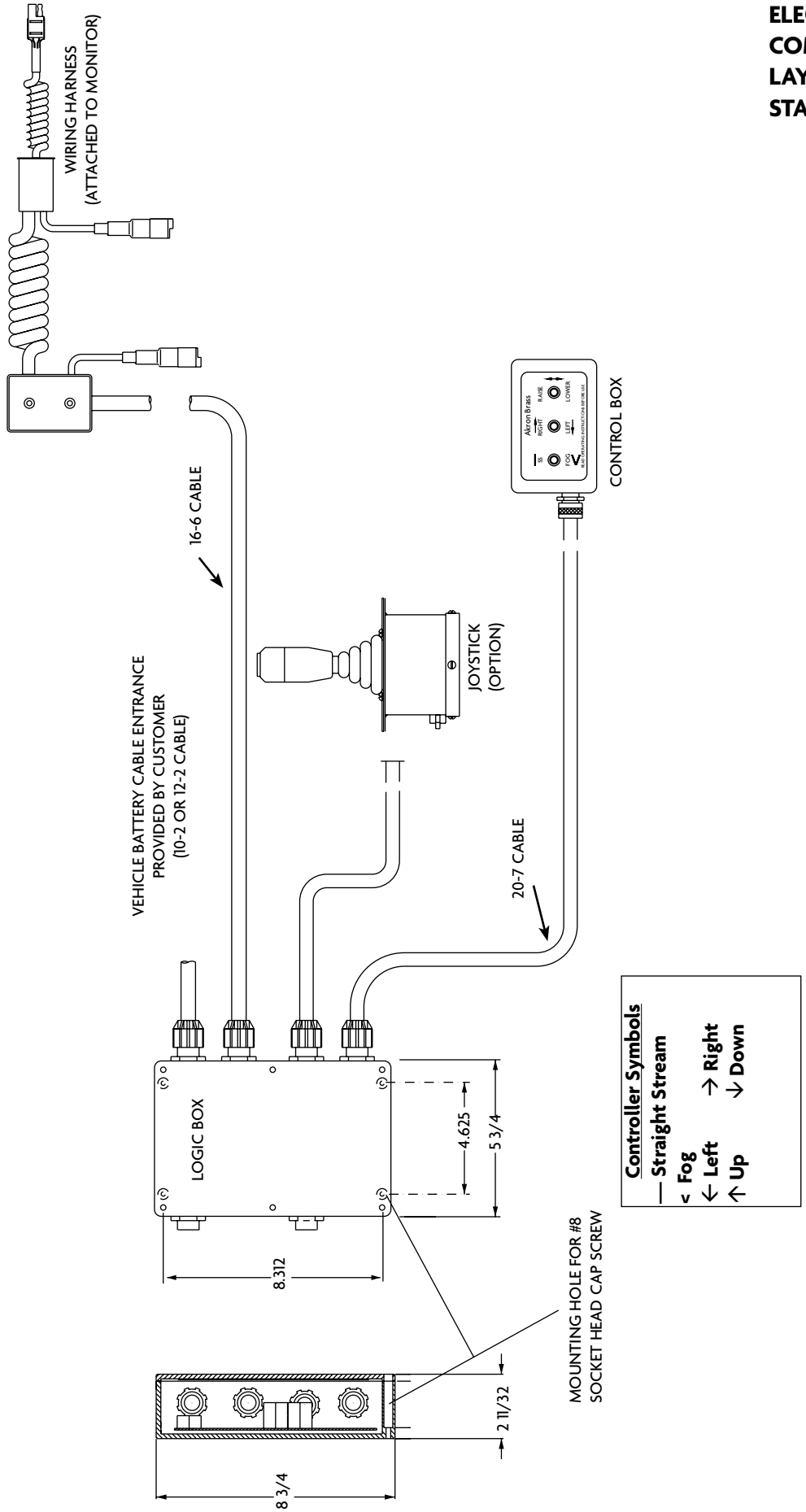

Figure 2A

ELECTRICAL COMPONENT LAYOUT (WITH VALVE)

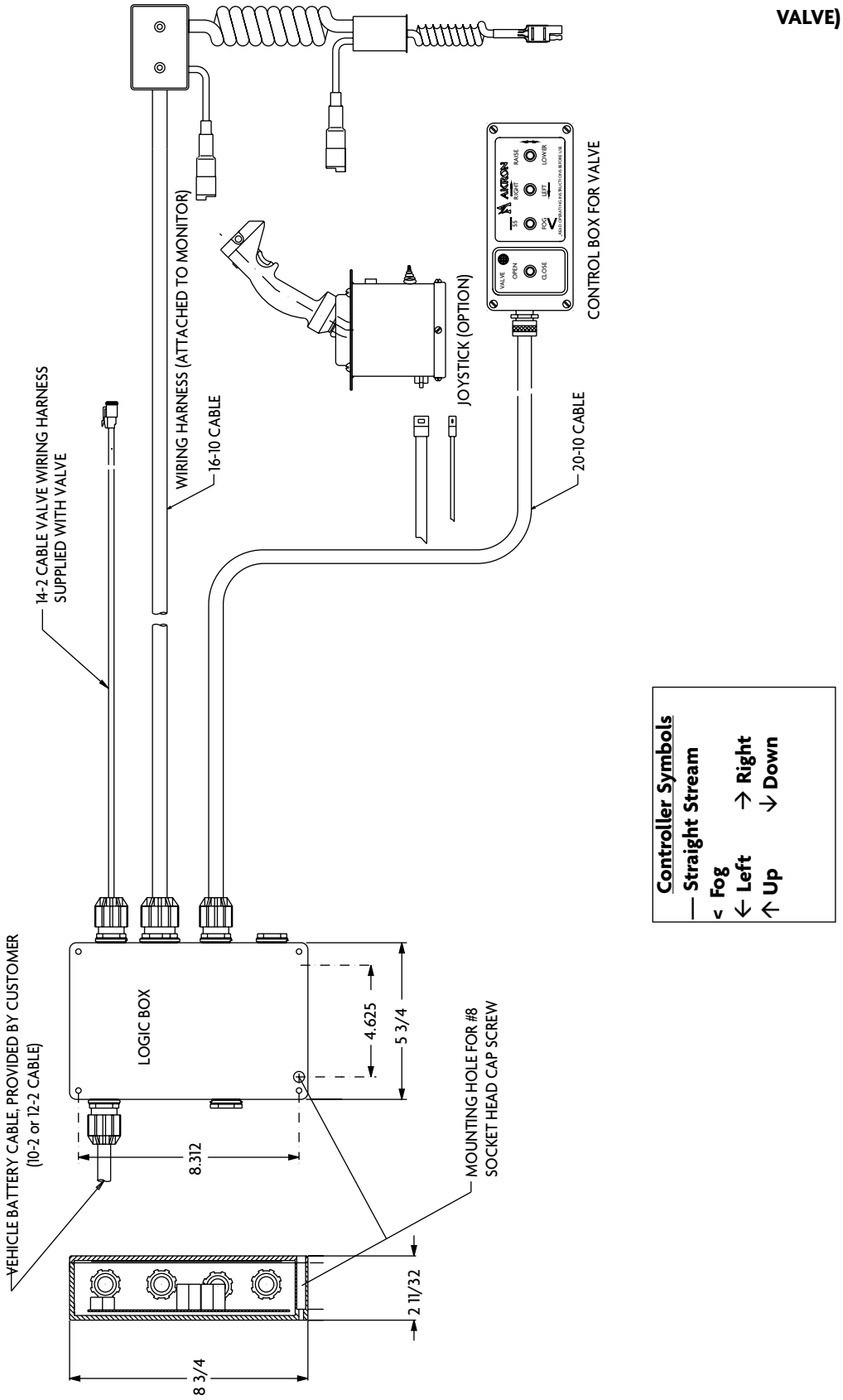

D. JOYSTICK WITH TRIGGER FOR VALVE, STOW AND AUTO OSCILLATION

To change the nozzle pattern toward the straight stream or fog press the corresponding button on top of the Joystick. To change the horizontal position right or left move the Joystick towards the appropriate direction. To change the vertical position up or down move the Joystick forward for down and backwards for up. To open and close the valve, press the trigger to open the valve and release the trigger to close the valve. The valve can be maintained open by pressing the valve switch towards open. Note: When valve is maintained open, the trigger will not operate the valve. To stow the monitor, press and release the Stow button. The stow LED light will turn off when stowed. The stow positioncan learn a new position (see Section E). The monitor is shipped with the stow position set at 0° rotation and 0° elevation. For auto oscillation, see section F.

E. STOW POSITION

To learn a new Stow or Deploy position:

- The LED will flash three times for the set-up mode for the Stow and Deploy.
- Move the monitor to the desired Stow position.
- Hold down the Fog switch and press and release the Stow switch and then release th Fog switch. This will set the Stow position.

Deploy Position (if applicable)

- Move the monitor to the desired Deploy position.
- Hold down the Fog switch and press and release the Deploy switch and then release the Fog switch. This will set the Deploy position.

Press and release the SS switch to exit the Set-up mode.

F. OSCILLATION MODE

The oscillation range can easily be learned each time it is activated. To learn an oscillation range, move the monitor near the center of an ideal range:

- Press and hold the Oscillation switch. The monitor will start rotating to the left. When the monitor reaches the desired left limit of the oscillation, release the switch. This will set the left limit and the monitor will start to rotate to the right.
- Press and hold the Oscillation switch again until the monitor reaches the desired right limit of the oscillation and release the switch. This will set the right limit.
  The monitor will rotate through this range until the left or right movement is activated or the oscillation off switch is activated. The limits of the oscillation can be easily changed during oscillation by activating the oscillation switch as follows:
- To increase or decrease the right limit, press and hold the oscillation switch when the monitor starts to rotate to the right. When the desired position is reached, release the switch. This will set the new right limit.
- To increase or decrease the left limit, press and hold the oscillation switch when the monitor starts to rotate to the left. When the desired position is reached, release the switch. This will set the new left limit.

G. JOYSTICK LED

- Red LED: Mode and diagnostic indicator
- Green LED: Constant On - Water is On (valve open)
  Constant Off - Water is Off (valve closed)
  Flashing - Water valve is moving towards open or close

H. FLASHES ON THE LED

The LED is an indication of what mode you are in and a diagnostic indicator. The following are the list of Flashes and the corresponding indication:

- Fast Flash: The monitor is Stowing or Deploying
- Slow Flash: The monitor is Oscillating
- Constant On: The monitor is Deployed
- Constant Off: The monitor is Stowed
- Two Blinks: Learn mode for Rotation and Elevation
- Three Blinks: Learn mode for Stow and Deploy
- Four Blinks: Voltage on position feedback Potentiometer is to low (Oscillation, Stow, Deploy and the Elevation and Rotation limits will not operate)
- Five Blinks: Voltage on the position feedback Potentiometer is not changing (Oscillation, Stow, Deploy and the Elevation and Rotation will not operate)

I. QUICK DISCONNECT

The FireFox is designed for a quick disconnect inlet. If equipped with a quick disconnect inlet, first mount the inlet on the 2" NPT piping. Make sure the latch pin on the inlet is facing towards the front (see figure 4). Place the monitor into the inlet so the two guide pins line up with the groove. Slide the monitor all the way in and rotate 15° clockwise until the latch pin locks in place. To remove the monitor, pull the latch pin, rotate the monitor 15° counterclockwise, and lift the monitor out of the inlet.

Warning: Make sure the monitor is in locked in place before flowing water. The latch pin must be flush with the housing.

J. MANUAL OVERRIDE CONTROLS

THE MANUAL OVERRIDE CONTROL IS TO BE USED WHEN THE POWER TO THE MONITOR IS OFF. A 1/4 inch Allen wrench will actuate the overrides. To use the manual override insert the hex head end of the override crank in the hexagon shaped hole. Then rotate or spin the override crank either clockwise or counterclockwise to aim the monitor in the desired direction.

WHEN THE OVERRIDE CRANKS ARE NO LONGER IN USE PUT THEM BACK IN THE STORAGE POSITION. DO NOT USE THE ELECTRIC CONTROLS WHEN THE OVERRIDE CRANKS ARE BEING USED OR ARE IN POSITION FOR USE.

MAINTENANCE INSTRUCTIONS

Your FireFox monitor and nozzle should be inspected prior to and after each use, to ensure it is in good operating condition. Periodically, an unanticipated incident occurs where the FireFox is misused in a manner that is inconsistent with standard operating practices and those listed in IFSTA. A partial list of potential misuse includes:

- Operating above maximum rated pressure and flow.
- Not draining, and allowing water to freeze inside.
- Prolonged exposure to temperatures above 130°F, or below -25°F.
- Operating in a corrosive environment.
- Having the FireFox nozzle hit a fixed object during operating or transportation.
- Other misuse that might be unique to your specific environment.

Also there are many “tell tale” signs that indicate repair is in order, such as:

- Controls that are either inoperable or difficult to operate.
- Excessive wear.
- Poor discharge performance.
- Water leaks.

If any of the above situations are encountered, the FireFox should be taken out of service, repaired, and tested by a qualified technician before placing it back in service.

Figure 5

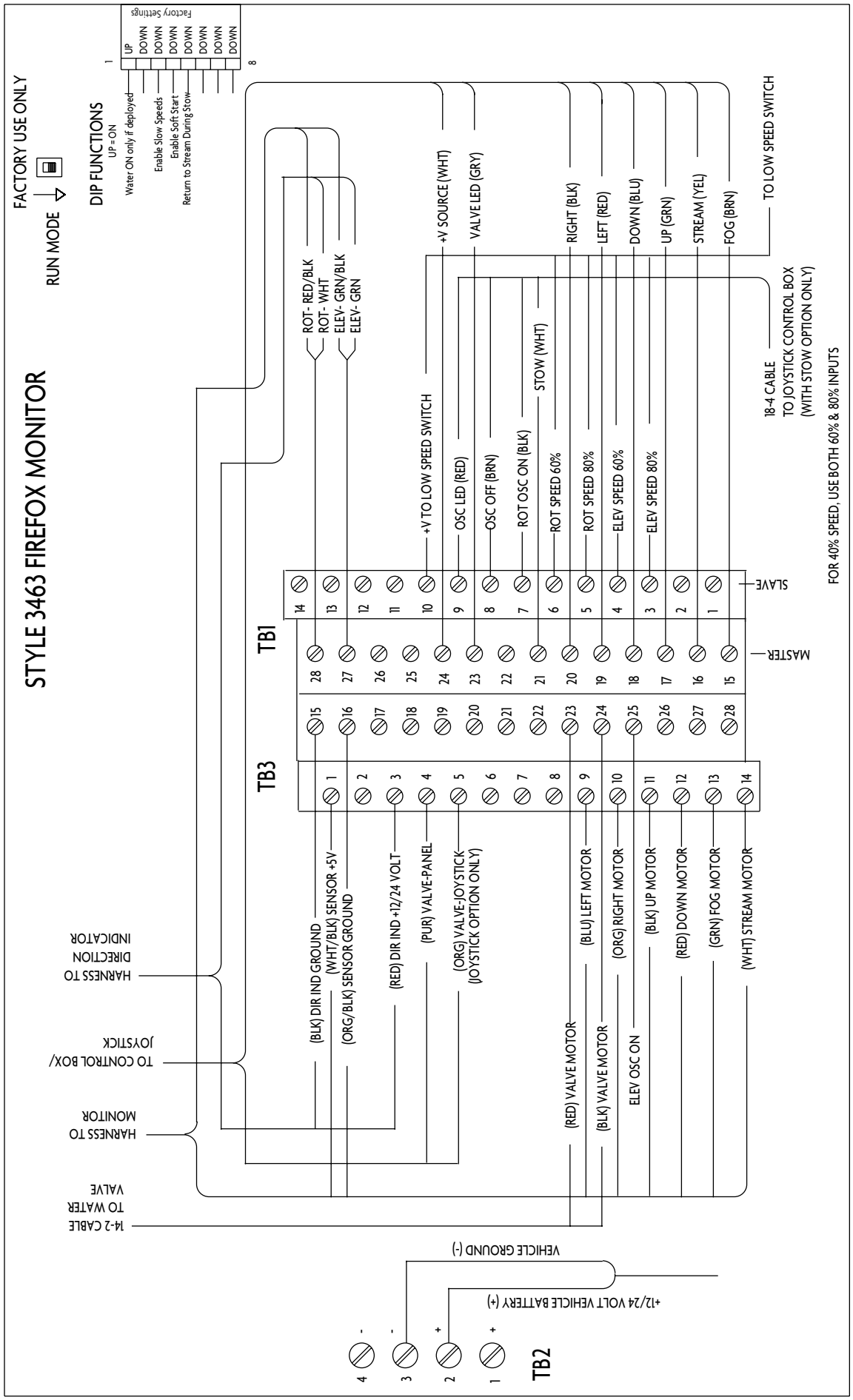
STYLE 3463 FIREFOX MONITOR
FACTORY USE ONLY
RUN MODE
DIP FUNCTIONS
UP = ON
Water ON only if deployed
Enable Slow Speeds
Enable Soft Start
Return to Stream During Stow
Factory Settings
UP
DOWN
DOWN
DOWN
DOWN
DOWN
DOWN
DOWN
TB1
TB3
TB2
SLAVE
MASTER
ROT- RED/BLK
ROT- WHT
ELEV- GRN/BLK
ELEV- GRN
+V SOURCE (WHT)
VALVE LED (GRY)
RIGHT (BLK)
LEFT (RED)
DOWN (BLU)
UP (GRN)
STREAM (YEL)
FOG (BRN)
TO LOW SPEED SWITCH
18-4 CABLE
TO JOYSTICK CONTROL BOX
(WITH STOW OPTION ONLY)
FOR 40% SPEED, USE BOTH 60% & 80% INPUTS
+V TO LOW SPEED SWITCH
OSC LED (RED)
OSC OFF (BRN)
ROT OSC ON (BLK)
STOW (WHT)
ROT SPEED 60%
ROT SPEED 80%
ELEV SPEED 60%
ELEV SPEED 80%
(BLK) DIR IND GROUND
(WHT/BLK) SENSOR +5V
(ORG/BLK) SENSOR GROUND
(RED) DIR IND +12/24 VOLT
(PUR) VALVE-PANEL
(ORG) VALVE-JOYSTICK
(JOYSTICK OPTION ONLY)
(RED) VALVE MOTOR
(BLU) LEFT MOTOR
(BLK) VALVE MOTOR
(ORG) RIGHT MOTOR
ELEV OSC ON
(BLK) UP MOTOR
(RED) DOWN MOTOR
(GRN) FOG MOTOR
(WHT) STREAM MOTOR
HARNESS TO
DIRECTION
INDICATOR
TO CONTROL BOX/
JOYSTICK
HARNESS TO
MONITOR
14-2 CABLE
TO WATER
VALVE
VEHICLE GROUND (-)
+12/24 VOLT VEHICLE BATTERY (+)

MOTOR REPLACEMENT

To replace either the horizontal or vertical rotational motors:

1. Disconnect Power from the unit.
2. Loosen and remove the four socket screws (Item 49 on the Parts List) from the gearbox housing (19).
3. Slowly remove the motor assembly (15) and gearbox housing (19) from the unit.

   IMPORTANT: Make sure the internal gear, (Item 25 on the Parts List), remains in place, (hold with a screwdriver), to avoid gear alignment problems.

4. Loosen and remove the four socket head capscrews (21) from the inside of the gearbox housing that hold the housing and the motor assembly together.
5. Remove gearbox housing (19) from the motor assembly (15).
6. Replace o-ring seal (18) on the gearbox housing (19).
7. Attach the new motor assembly (15) to the gearbox housing (19) making sure all four screws (21) are tight.
8. Install the motor and gearbox housing assembly to the unit making sure all four socket screws (49) are tight. It may be necessary to rotate the motor slightly to get the motor gear to line up with the gears inside the gearbox.
9. Restore power to the unit.
10. Test the operation of the unit.

Call Akron Brass Customer Service Department if any problems are encountered.

Figure 4

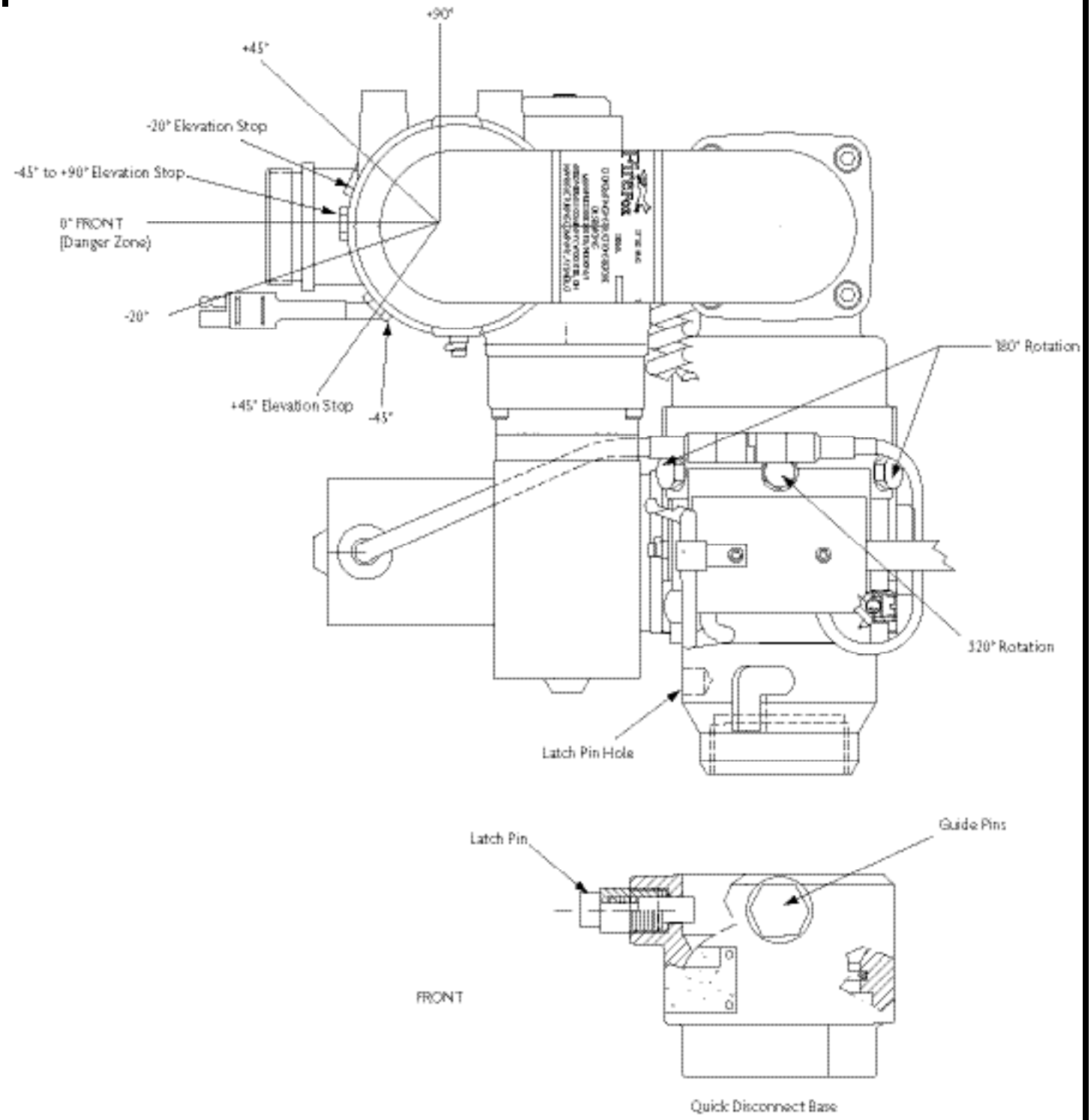
+90°
+45°
-20° Elevation Stop
-45° to +90° Elevation Stop
0° FRONT
(Danger Zone)
-20°
+45° Elevation Stop
-45°
180° Rotation
320° Rotation
Latch Pin Hole
Latch Pin
Guide Pins
FRONT
Quick Disconnect Base

Figure 2B

ELECTRICAL COMPONENT LAYOUT (WITH VALVE, AUTO OSCILLATION AND STOW)

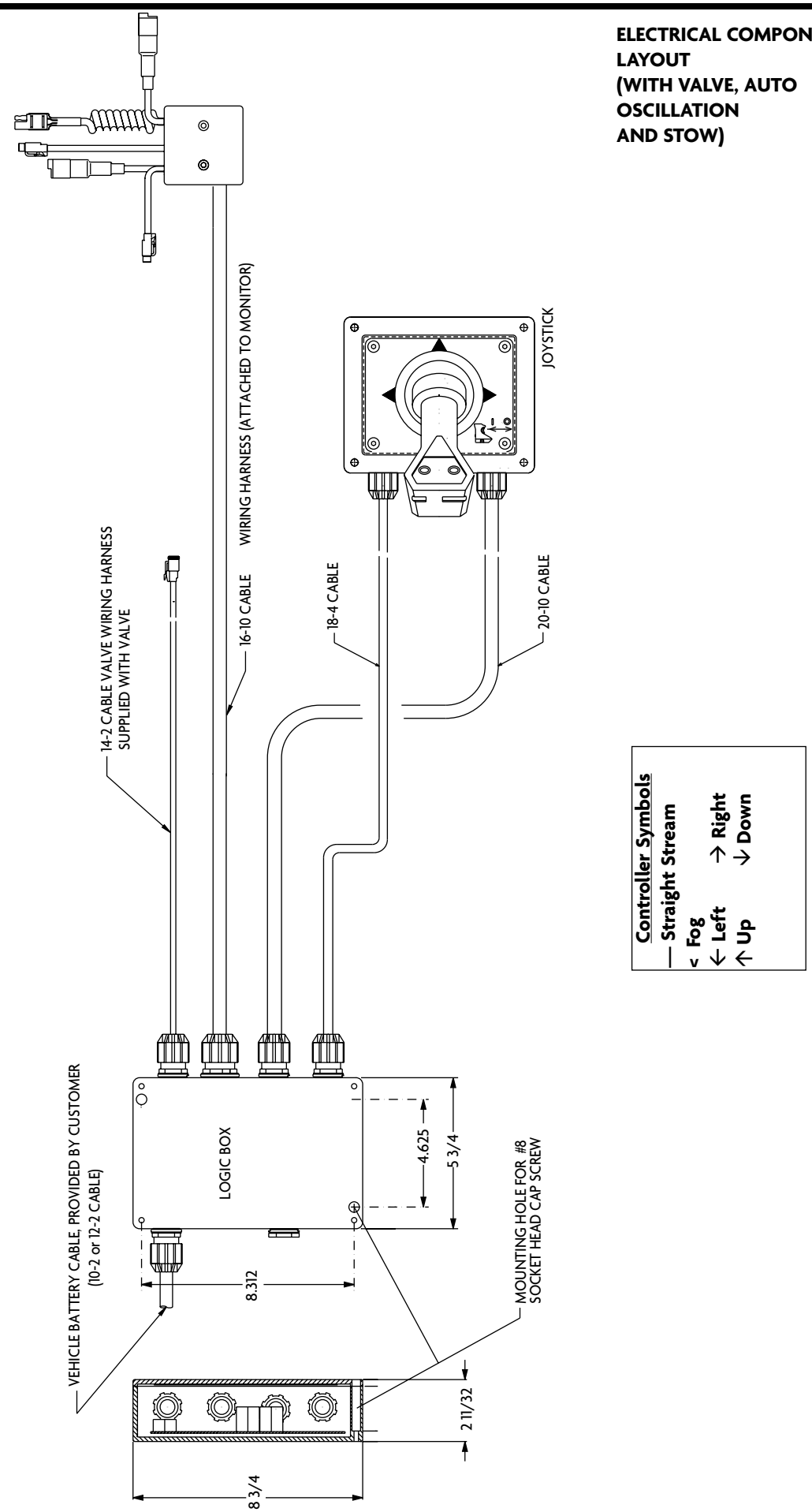

D. MECHANICAL MONITOR ATTACHMENT

The Monitor is to be mounted on the waterway with a 2" OR 2 $^1/_2$" NPT thread. The front of the monitor is shown in Figure 4. The 2 $^1/_2$" NPT inlet will have a Logo etched on the front. The 2" NPT Inlet will have the Latch Pin Hole facing the front.

E. THE ROTATION AND ELEVATION LIMITS:

The hard limits are factory set at 320° Rotation, and -20° to +90° Elevation with physical stops.
The soft limits are not set at the factory. To change the soft limits:

- Shut down Power to the monitor
- Hold down the SS switch and turn the power on. Release the SS switch.
- The LED will flash twice for the set-up mode of the Rotation and Elevation limits. To continue to the Stow and Deploy set-up mode press and release the SS switch. The LED will flash three times for the Stow and Deploy set-up mode.

Rotation Limits

- Move the monitor to the desired Left limit (release the switch)
- Hold down the Fog switch and press and release the Left switch and then release the Fog switch. This will set the Left limit.
- Move the monitor to the desired Right limit (release the switch)
- Hold down the Fog switch and press the release the Right switch and then release the Fog switch. This will set the lower limit.

Elevation Limits

- Move the monitor to the desired upper limit (release the switch)
- Hold down the Fog switch and press and re release the Raise switch and then release the Fog switch. This will set the upper limit.
- Move the monitor to the desired lower limit (release the switch)
- Hold down the Fog switch and press and release the Lower switch and then release the Fog switch. This will set the l ower limit.

Press and release the SS switch to exit the Rotation and Elevation set-up mode and enter the Stow and Deploy set-up mode.

F. STOW AND DEPLOY:

- The LED will flash three times for the set-up mode for the Stow and Deploy.

Stow Position

- Move the monitor to the desired Stow position.
- Hold down the fog switch and press and release the Stow switch and then release the Fog switch. This will set the Stow position.

Deploy Position (if applicable)

- Move the monitor to the desired Deploy position.
- Hold down the Fog switch and press and release the Deploy switch and then release the Fog switch. This will set the Deploy position.

Press and release the SS switch to exit the set-up mode.

OPERATING INSTRUCTIONS

A. CONTROL BOX CONTROL OPERATION

To change the nozzle pattern toward the straight stream or fog position press the proper toggle switch toward straight or fog respectively. To change the horizontal monitor position toward the right or left press the proper toggle switch toward right or left respectively. To change the vertical monitor position upward or downward press the proper toggle switch toward raise or lower respectively.

B. JOYSTICK

To change the nozzle pattern toward the straight stream or fog press the corresponding button on top of the Joystick. To change the horizontal position right or left move the Joystick towards the appropriate direction. To change the vertical position up or down move the Joystick forward for down and backwards for up.

C. JOYSTICK WITH TRIGGER FOR VALVE

To change the nozzle pattern toward the straight stream or fog press the corresponding button on top of the Joystick. To change the horizontal position right or left move the Joystick towards the appropriate direction. To change the vertical position up or down move the Joystick forward for down and backwards for up. To open and close the valve, press the trigger to open the valve and release the trigger to close the valve. The valve can be maintained open by pressing the valve switch towards open. Note: When valve is maintained open, the trigger will not operate the valve.

- Not recommended for use in salt water applications.
- F or firefighting by trained firefighters only.
- For use with water or standard fire fighting foams only. After use with foam, flush with fresh water.
- Do not use the FireFox nozzle as a forcible entry tool.
- Drain the FireFox monitor and nozzle after use to prevent “freeze damage”.
- Ensure that the thread in the nozzle swivel matches the thread on the FireFox outlet. Do not overtighten the nozzle onto the FireFox.
- The FireFox monitor, nozzle, logic box, control boxes and field adjustable rotation stops are made for optimal performance, Do not alter in any manner.
- Do not install shutoffs on the outlet of the FireFox.
- Mount the logic box, control boxes out of Danger Zone (Figure 4).

ELECTRICAL INSTALLATION INSTRUCTIONS

A. CONTROL BOXES AND JOYSTICK WIRING ATTACHMENT

The following steps will prepare either the joystick or control box for attachment to the logic box.

STEP 1 If the control box includes an attached cable skip to STEP 5.

STEP 2 Determine the length of #20-7 cable needed, add 10 inches, then cut. For example, if a five foot length of cable is needed, add 10 inches and cut the cable 5 foot 10 inches long.

STEP 3 Remove the cable grip nut and washer from the control box and put it on the cable with the threads facing the box. On the same end of the cable remove 4 inches of the outer casing of the cable and strip back $^{3}/_{8}$ inch from each of the 7 wires.

STEP 4 Take the 7 ring terminals from the plastic bag and crimp them on the 7 wires. Remove the four control box cover screws and set the control box cover aside. Thread the 7 wires through the cable grip attached to the control box and attach them to the proper terminals. Reattach control box cover and secure with the four screws. Tighten the cable grip nut and washer on the cable to the cable grip on the control box to secure the cable.

STEP 5 Remove the cable grip nut from the logic box and put it on the other end of the cable with the threads facing out. Remove 6 inches of the outer cover and strip back $^{3}/_{8}$ inch from each of the wires.

STEP 6 Remove the 6 logic box cover screws and set the logic box cover aside. Thread the wires through the hole in the logic box (see component layout, Figure 2). Thread the cable grip washer and cable grip nut with the threads facing the box on the cable. Pull enough cable through the cable grip to ensure a good fit. Tighten the cable grip nut and attach the individual wires to the proper terminals (see wiring schematic Figure 5). Reattach the logic box cover and secure with the 6 screws.

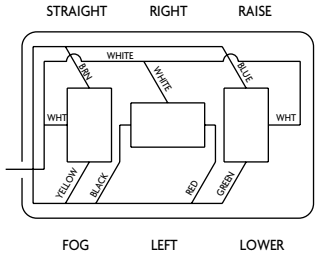

B. MONITOR WIRING HARNESS ATTACHMENT

These instructions are to attach the monitor wiring harness to the logic box.

STEP 7 Remove the cable grip nut from the logic box for the wiring harness cable. DO NOT REMOVE THE CABLE GRIP. Put the cable grip nut on the wiring harness cable with the threads facing out. Put the cable through the correct logic box cable grip (see component layout, Figure 2) so the cable grip nut will grab the outer cover of the cable. Tighten the cable grip nut and attach the individual wires to the proper terminals (see wiring schematic Figure 5).

C. BATTERY ATTACHMENT

The battery connections should be the last connection made.

STEP 8 VEHICLE BATTERY - Remove the logic box cable grip nut for the vehicle battery and place it on to the battery cable (#10-2 or #12-2 depending on length) with the treads facing out. Thread the cable grip nut and attach the individual wires to the proper terminals (see wiring schematic Figure 5). Reattach the logic box cover and secure with the 6 screws. NOTE: To supply enough current to operate the monitor properly, adequate wire size is critical.

AKRON
BRASS COMPANY
Tested... Proven... Trusted.
ISO 9001 REGISTERED COMPANY

PHONE: 330.264.5678 or 800.228.1161 | FAX: 330.264.2944 or 800.531.7335 | akronbrass.com

REVISED: 8/11

WARRANTY AND DISCLAIMER: We warrant Akron Brass products for a period of five (5) years after purchase against defects in materials or workmanship. Akron Brass will repair or replace product which fails to satisfy this warranty. Repair or replacement shall be at the discretion of Akron Brass. Products must be promptly returned to Akron Brass for warranty service.

We will not be responsible for: wear and tear; any improper installation, use, maintenance or storage; negligence of the owner or user; repair or modification after delivery; damage; failure to follow our instructions or recommendations; or anything else beyond our control. WE MAKE NO WARRANTIES, EXPRESS OR IMPLIED, OTHER THAN THOSE INCLUDED IN THIS WARRANTY STATEMENT, AND WE DISCLAIM ANY IMPLIED WARRANTY OF MERCHANTABILITY OR FITNESS FOR ANY PARTICULAR PURPOSE. Further, we will not be responsible for any consequential, incidental or indirect damages (including, but not limited to, any loss of profits) from any cause whatsoever. No person has authority to change this warranty.

© Akron Brass Company. 2011 All rights reserved. No portion of this can be reproduced without the express written consent of Akron Brass Company.