AKRON BRASS COMPANY

TECHNICAL SERVICE PARTS

STYLE 1724, 1727
Turbojet® Tips

OPERATING INSTRUCTIONS:

- Flow Rating at 100 PSI (7 BAR)
- Open and Close Slowly
- Maximum Operating Pressure 200 PSI (14 BAR)

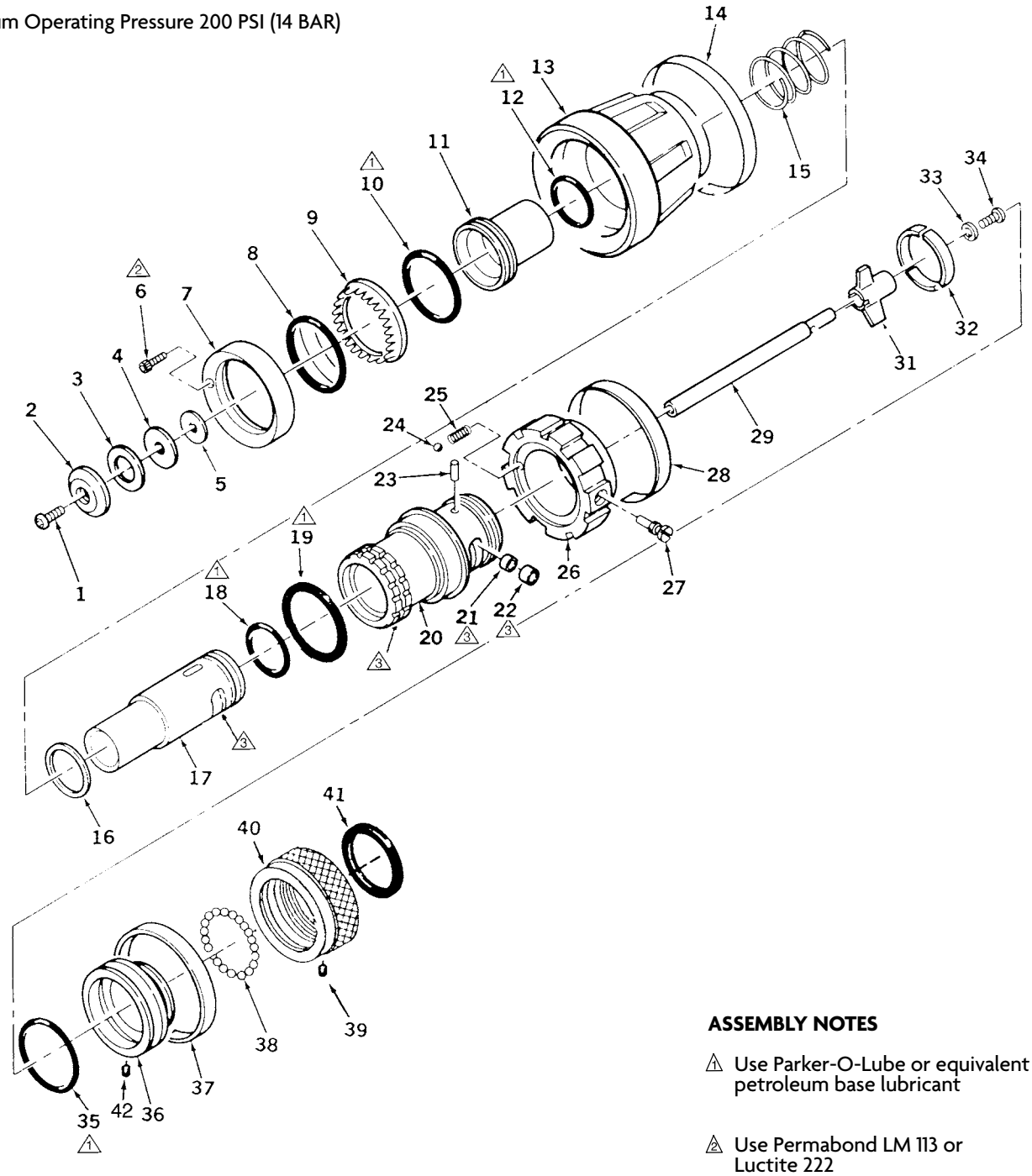

ASSEMBLY NOTES

1. Use Parker-O-Lube or equivalent petroleum base lubricant
2. Use Permabond LM 113 or Luctite 222
3. Use Low-Temp Lubriplate

STYLE 1724, 1727
Turbojet® Tips
TECHNICAL SERVICE PARTS LIST

ITEM NO.	DESCRIPTION	PART NUMBER	QUANITITY	
			1724P	1727P
1	Socket Head Cap Screw	765147	1	1
2	Baffle Head	102305	1	1
3	Baffle Gasket	717044	1	1
4	Baffle Gasket Retainer	102306	1	1
5	Spacer	769388		1
6	Socket Head Cap Screw	765052	2	2
7	Turbine Retaining Ring	758243	1	1
8	O-Ring	757292	1	1
9	Turbine Teeth	772149	1	1
10	O-Ring	757266	1	1
11	Throat (100 psi)	102273	1	1
11	Throat (75 psi)	118834		1
12	O-Ring	757248	1	1
13	Bumper Assembly	17270009	1	1
14	Pattern Indicating Band	704806	1	1
15	Spring	769389	1	1
16	Retaining Ring	756094	1	1
17	Discharge Tube (100 psi)	102272	1	
17	Discharge Tube (100 psi)	102307		1
17	Discharge Tube (75 psi)	118835		1
18	O-Ring	757247	1	1
19	Seal	768223	1	1
20	Nozzle Body	102258	1	1
21	Cam Roller - Short	707239	1	1
22	Cam Roller - Long	707238	1	1
23	Key Pin	727033	1	1
24	Detent Ball	704018	1	1
25	Detent Spring	769111	1	1
26	Discharge Control Ring	109108	1	1
27	Cam Axle	702050	1	1
28	Discharge Control Band - GPM (100 psi)	704849	1	
28	Discharge Control Band - GPM (100 psi)	704850		1
28	Discharge Control Band - LPM (7 bar)	704808	1	
28	Discharge Control Band - LPM (7 bar)	704807		1
28	Discharge Control Band - GPM (75 psi)	704830		1
29	Stem	**	1	1
31	Spider	**	1	1
32	Spider Segment	769390	1	1
33	Washer	**	1	1
34	Socket Head Cap Screw	765149	1	1
35	O-Ring	757277	1	1
36	Swivel Adapter	102304	1	1
37	I.D. Band	704548	1	
37	I.D. Band	704545		1
38	Locking Balls	*	38	38
39	Set Screw	765008	1	1
40	Swivel (NH)†	108313	1	1
40	Swivel (NPSH)†	108314	1	1
41	Swivel Gasket	717042	1	1
42	Set Screw	765024	1	1

† For other threads order by description and thread size (ODM and TPI) or by Akron Thread Code.
* Packet of 50 Locking Balls - P/N 109042
** Parts not sold separately. Nozzle must be returned to the factory for repair.

PHONE: 330.264.5678 or 800.228.1161 | FAX: 330.264.2944 or 800.531.7335 | akronbrass.com

REVISED: 8/11

WARRANTY AND DISCLAIMER: We warrant Akron Brass products for a period of five (5) years after purchase against defects in materials or workmanship. Akron Brass will repair or replace product which fails to satisfy this warranty. Repair or replacement shall be at the discretion of Akron Brass. Products must be promptly returned to Akron Brass for warranty service.

We will not be responsible for: wear and tear; any improper installation, use, maintenance or storage; negligence of the owner or user; repair or modification after delivery; damage; failure to follow our instructions or recommendations; or anything else beyond our control. WE MAKE NO WARRANTIES, EXPRESS OR IMPLIED, OTHER THAN THOSE INCLUDED IN THIS WARRANTY STATEMENT, AND WE DISCLAIM ANY IMPLIED WARRANTY OF MERCHANTABILITY OR FITNESS FOR ANY PARTICULAR PURPOSE. Further, we will not be responsible for any consequential, incidental or indirect damages (including, but not limited to, any loss of profits) from any cause whatsoever. No person has authority to change this warranty.

© Akron Brass Company. 2011 All rights reserved. No portion of this can be reproduced without the express written consent of Akron Brass Company.

Tested... Proven... Trusted.

ISO 9001 REGISTERED COMPANY